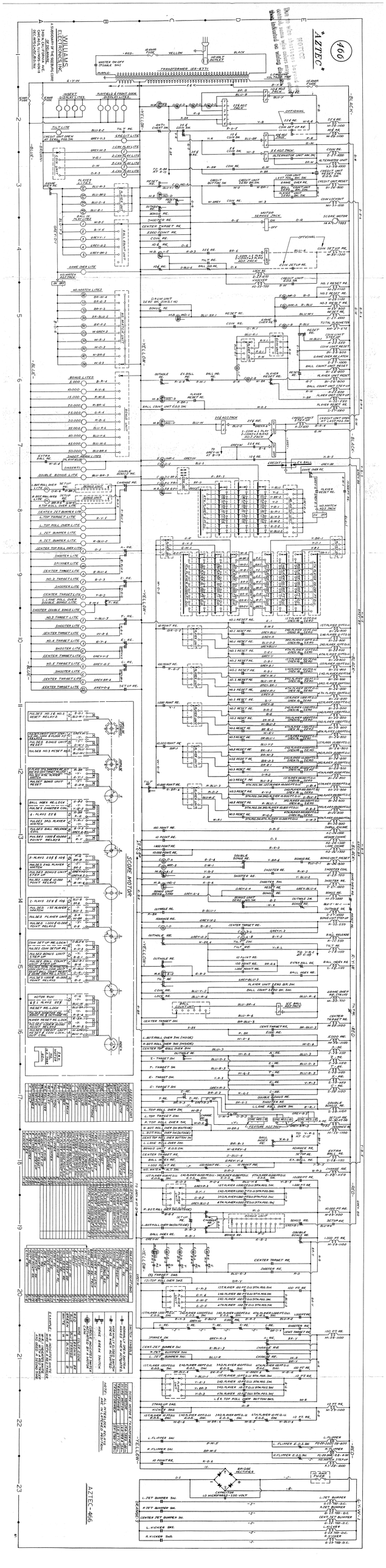
"AZTEC"
466
WILLIAMS
A SUBSIDIARY OF THE BERTRAM CORP.
3401 N. CALIFORNIA AVE.
CHICAGO, ILLINOIS 60618
312-267-2240
TELEX 25-3454
TRANSFORMER (24-4273)
MASTER ON-OFF (TOGGLE SW.)
SCORE MODULE
AZTEC-466