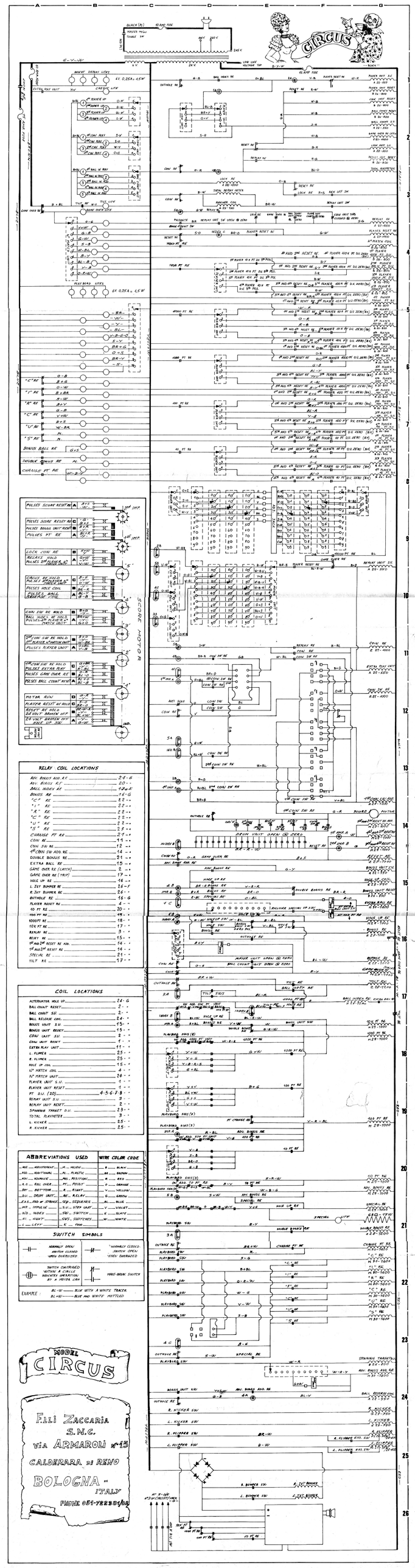
CIRCUS
MODEL CIRCUS
FLLI ZACCARIA S.N.C.
VIA ARMAROLI n°15
CALDERARA DI RENO
BOLOGNA ITALY
PHONE 051-722334/42
SCORE MOTOR
RELAY COIL LOCATIONS
COIL LOCATIONS
ABBREVIATIONS USED
WIRE COLOR CODE
SWITCH SYMBOLS
EXAMPLE