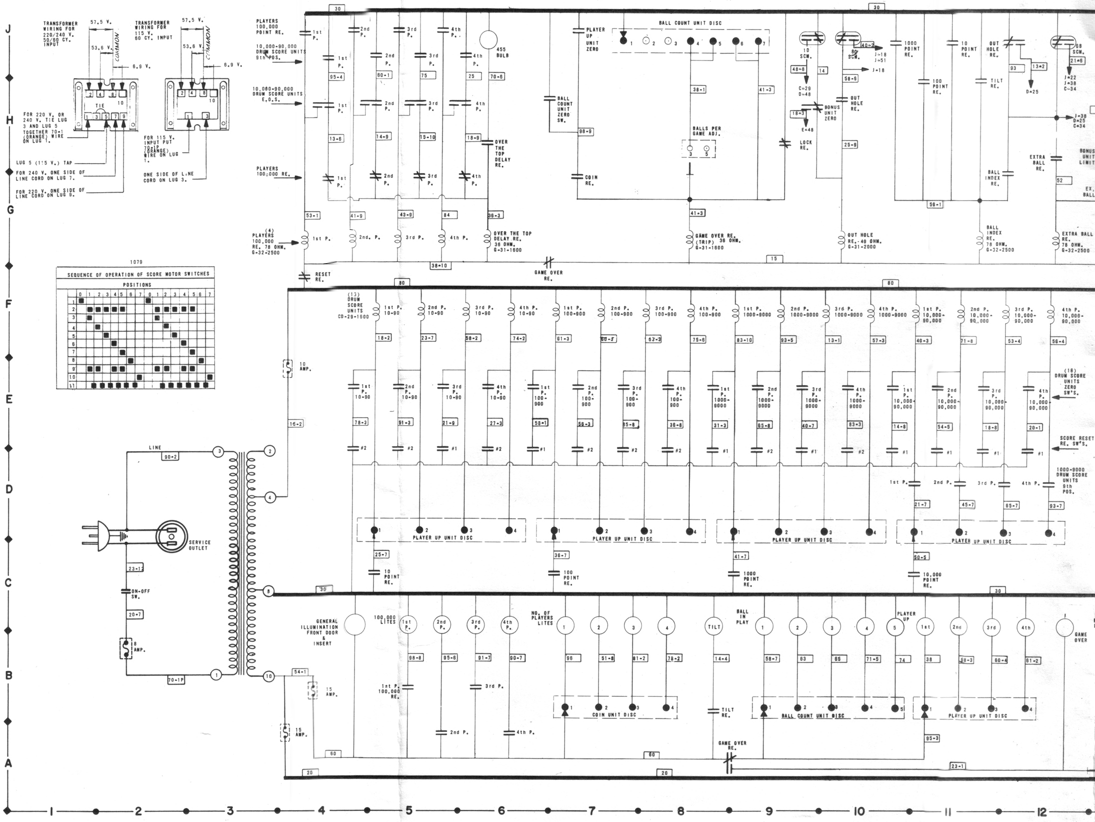
TRANSFORMER WIRING FOR 220/240 V. 50/60 CY. INPUT
57.5 V.
53.6 V.
COMMON
6.9 V.
TIE
TRANSFORMER WIRING FOR 115 V. 60 CY. INPUT
FOR 220 V. OR 240 V. TIE LUG 3 AND LUG 5 TOGETHER 70-1 (ORANGE) WIRE ON LUG 1.
LUG 5 (115 V.) TAP
FOR 240 V. ONE SIDE OF LINE CORD ON LUG 7.
FOR 220 V. ONE SIDE OF LINE CORD ON LUG 9.
FOR 115 V. INPUT PUT 70-1P (ORANGE) WIRE ON LUG 1.
ONE SIDE OF LINE CORD ON LUG 3.
PLAYERS 100,000 POINT RE.
10,000-90,000 DRUM SCORE UNITS 9th POS.
10,000-90,000 DRUM SCORE UNITS E.O.S.
PLAYERS 100,000 RE.
(4) PLAYERS 100,000 RE. 78 OHM. G-32-2500
1st P.
2nd P.
3rd P.
4th P.
455 BULB
OVER THE TOP DELAY RE.
OVER THE TOP DELAY RE. 36 OHM. G-31-1600
RESET RE.
GAME OVER RE.
PLAYER UP UNIT ZERO
BALL COUNT UNIT DISC
BALL COUNT UNIT ZERO SW.
BALLS PER GAME ADJ.
COIN RE.
GAME OVER RE. (TRIP) 36 OHM. G-31-1600
LOCK RE.
10 SCM.
80 SCM.
BONUS UNIT ZERO
OUT HOLE RE.
OUT HOLE RE. 49 OHM. G-31-2000
1000 POINT RE.
100 POINT RE.
10 POINT RE.
OUT HOLE RE.
TILT RE.
BALL INDEX RE.
BALL INDEX RE. 78 OHM. G-32-2500
68 SCM.
EXTRA BALL RE.
EXTRA BALL RE. 78 OHM. G-32-2500
BONUS UNIT LIMIT
EX. BALL
J-18
J-51
C-29
D-48
E-48
D-25
J-22
J-38
C-34
J-38
D-25
C-34
(13) DRUM SCORE UNITS CD-29-1600
1st P. 10-90
2nd P. 10-90
3rd P. 10-90
4th P. 10-90
1st P. 100-900
2nd P. 100-900
3rd P. 100-900
4th P. 100-900
1st P. 1000-9000
2nd P. 1000-9000
3rd P. 1000-9000
4th P. 1000-9000
1st P. 10,000-90,000
2nd P. 10,000-90,000
3rd P. 10,000-90,000
4th P. 10,000-90,000
(16) DRUM SCORE UNITS ZERO SW'S.
SCORE RESET RE. SW'S.
1000-9000 DRUM SCORE UNITS 9th POS.
#1
#2
PLAYER UP UNIT DISC
10 POINT RE.
100 POINT RE.
1000 POINT RE.
10,000 POINT RE.
10 AMP.
LINE
SERVICE OUTLET
ON-OFF SW.
8 AMP.
15 AMP.
15 AMP.
GENERAL ILLUMINATION FRONT DOOR & INSERT
100,000 LITES
NO. OF PLAYERS LITES
TILT
BALL IN PLAY
PLAYER UP
GAME OVER
1st P. 100,000 RE.
3rd P.
2nd P.
4th P.
COIN UNIT DISC
TILT RE.
BALL COUNT UNIT DISC
PLAYER UP UNIT DISC
GAME OVER RE.
30
80
60
20
J
H
G
F
E
D
C
B
A
1
2
3
4
5
6
7
8
9
10
11
12

1079

SEQUENCE OF OPERATION OF SCORE MOTOR SWITCHES																
POSITIONS	0	1	2	3	4	5	6	7	0	1	2	3	4	5	6	7
1	■								■							
2		■	■	■	■	■				■	■	■	■	■		
3		■								■						
4			■								■					
5				■								■				
6					■								■			
7						■								■		
8							■								■	
9		■	■		■	■				■	■		■	■		
10								■								■
11		■	■	■	■	■	■			■	■	■	■	■	■	

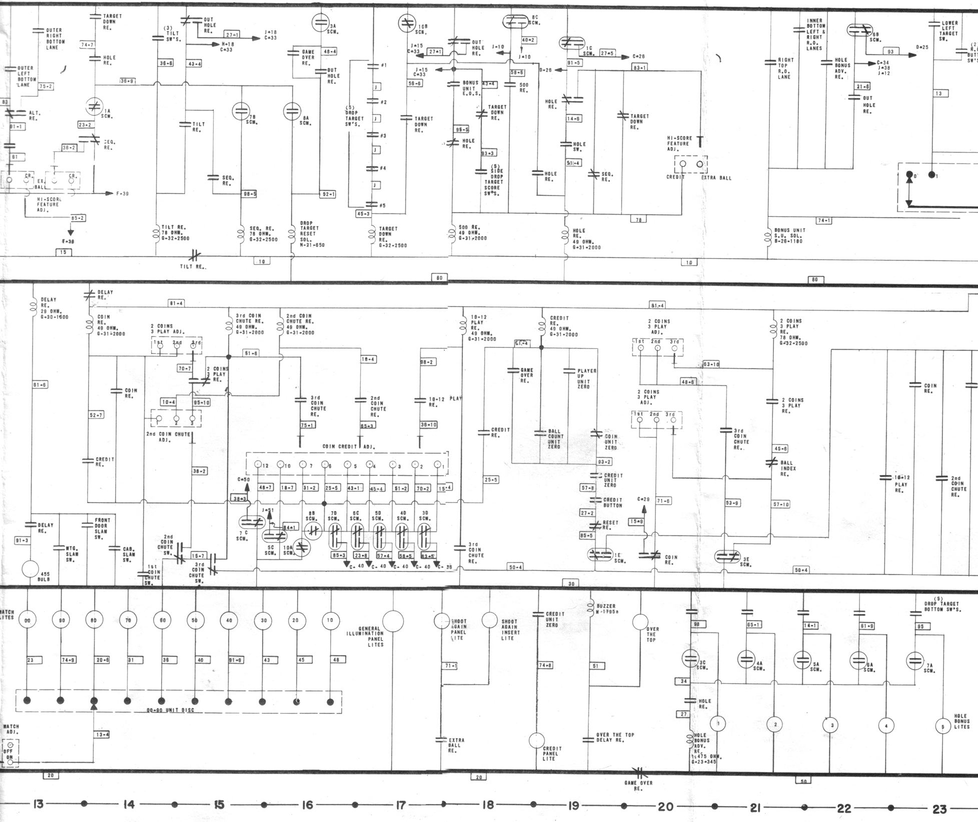
OUTER RIGHT BOTTOM LANE
TARGET DOWN RE.
74-7
HOLE RE.
OUTER LEFT BOTTOM LANE
75-2
83
36-9
ALT. RE.
81-1
1A SCM.
23-2
SEQ. RE.
36-2
61
CR.
EX. BALL
CR.
HI-SCORE FEATURE ADJ.
F-39
85-2
F-38
15
(3) TILT SW'S.
OUT HOLE RE.
27-1
J-18 C-33
H-18 C-33
36-6
43-4
TILT RE.
7B SCM.
SEQ. RE.
98-5
TILT RE. 78 OHM. G-32-2500
SEQ. RE. 78 OHM. G-32-2500
TILT RE.
10
3A SCM.
GAME OVER RE.
48-4
OUT HOLE RE.
8A SCM.
52-1
DROP TARGET RESET SOL. N-21-650
#1
#2
#3
#4
#5
J
(5) DROP TARGET SW'S.
45-3
10B SCM.
J-15 C-33
27-1
TARGET DOWN RE.
58-6
TARGET DOWN RE. G-32-2500
80
8C SCM.
40-2
J-10
J-10
OUT HOLE RE.
J-15 C-33
58-6
BONUS UNIT E.O.S.
43-4
500 RE.
TARGET DOWN RE.
96-5
HOLE RE.
93-3
(5) SIDE DROP TARGET SCORE SW'S.
500 RE. 49 OHM. G-31-2000
1C SCM.
27-5
C-28
D-26
91-5
83-1
HOLE RE.
14-6
HOLE SW.
51-4
HOLE RE.
SEQ. RE.
TARGET DOWN RE.
HI-SCORE FEATURE ADJ.
CREDIT
EXTRA BALL
78
HOLE RE. 49 OHM. G-31-2000
10
RIGHT TOP R.O. LANE
INNER BOTTOM LEFT & RIGHT R.O. LANES
HOLE BONUS ADV. RE.
6B SCM.
93
D-25
C-34 J-38 J-12
21-6
OUT HOLE RE.
LOWER LEFT TARGET SW.
13
(2 R. BUTT SW'S
0
1
74-1
BONUS UNIT S.U. SOL. B-26-1100
80
DELAY RE. 29 OHM. G-30-1600
DELAY RE.
81-4
COIN RE. 49 OHM. G-31-2000
2 COINS 3 PLAY ADJ.
1st 2nd 3rd
3rd COIN CHUTE RE. 49 OHM. G-31-2000
2nd COIN CHUTE RE. 49 OHM. G-31-2000
61-6
81-6
70-7
2 COINS 3 PLAY RE.
COIN RE.
10-4
95-10
52-7
2nd COIN CHUTE ADJ.
18-4
3rd COIN CHUTE RE.
2nd COIN CHUTE RE.
98-2
10-12 PLAY RE.
75-1
65-3
36-10
38-2
CREDIT RE.
COIN CREDIT ADJ.
12 10 7 6 5 4 3 2 1
C-50
48-7
18-7
31-2
25-5
43-1
45-4
51-2
70-2
15-4
38-3
J-51
84-1
7C SCM.
5C SCM.
10A SCM.
8B SCM.
7D SCM.
6C SCM.
5D SCM.
4D SCM.
3D SCM.
85-3
23-6
57-4
58-5
83-5
C-40
C-40
C-40
C-40
C-36
DELAY RE.
91-3
MTG. SLAM SW.
FRONT DOOR SLAM SW.
CAB. SLAM SW.
2nd COIN CHUTE SW.
15-7
3rd COIN CHUTE SW.
1st COIN CHUTE SW.
455 BULB
10-12 PLAY RE. 49 OHM. G-31-2000
CREDIT RE. 49 OHM. G-31-2000
61-4
GAME OVER RE.
PLAYER UP UNIT ZERO
CREDIT RE.
BALL COUNT UNIT ZERO
COIN UNIT ZERO
93-2
CREDIT UNIT ZERO
25-5
57-8
CREDIT BUTTON
27-2
RESET RE.
85-5
1E SCM.
3rd COIN CHUTE RE.
50-4
30
81-4
2 COINS 3 PLAY ADJ.
1st 2nd 3rd
63-10
48-6
2 COINS 3 PLAY ADJ.
1st 2nd 3rd
2 COINS 3 PLAY RE. 78 OHM. G-32-2500
2 COINS 3 PLAY RE.
3rd COIN CHUTE RE.
45-6
BALL INDEX RE.
C-29
71-6
15-9
53-9
57-10
COIN RE.
3E SCM.
50-4
COIN RE.
10-12 PLAY RE.
2nd COIN CHUTE RE.
MATCH LITES
00 90 80 70 60 50 40 30 20 10
23
74-9
20-6
31
36
40
81-9
43
45
48
00-90 UNIT DISC
13-4
MATCH ADJ.
OFF
ON
20
GENERAL ILLUMINATION PANEL LITES
SHOOT AGAIN PANEL LITE
SHOOT AGAIN INSERT LITE
71-1
EXTRA BALL RE.
20
CREDIT UNIT ZERO
74-8
CREDIT PANEL LITE
BUZZER M-1795a
51
OVER THE TOP
OVER THE TOP DELAY RE.
GAME OVER RE.
98
65-1
14-1
61-9
(5) DROP TARGET BOTTOM SW'S.
95
3C SCM.
4A SCM.
5A SCM.
6A SCM.
7A SCM.
34
27
HOLE RE.
1
2
3
4
5
HOLE BONUS LITES
HOLE BONUS ADV. RE. 475 OHM. G-23-345
50
13 14 15 16 17 18 19 20 21 22 23

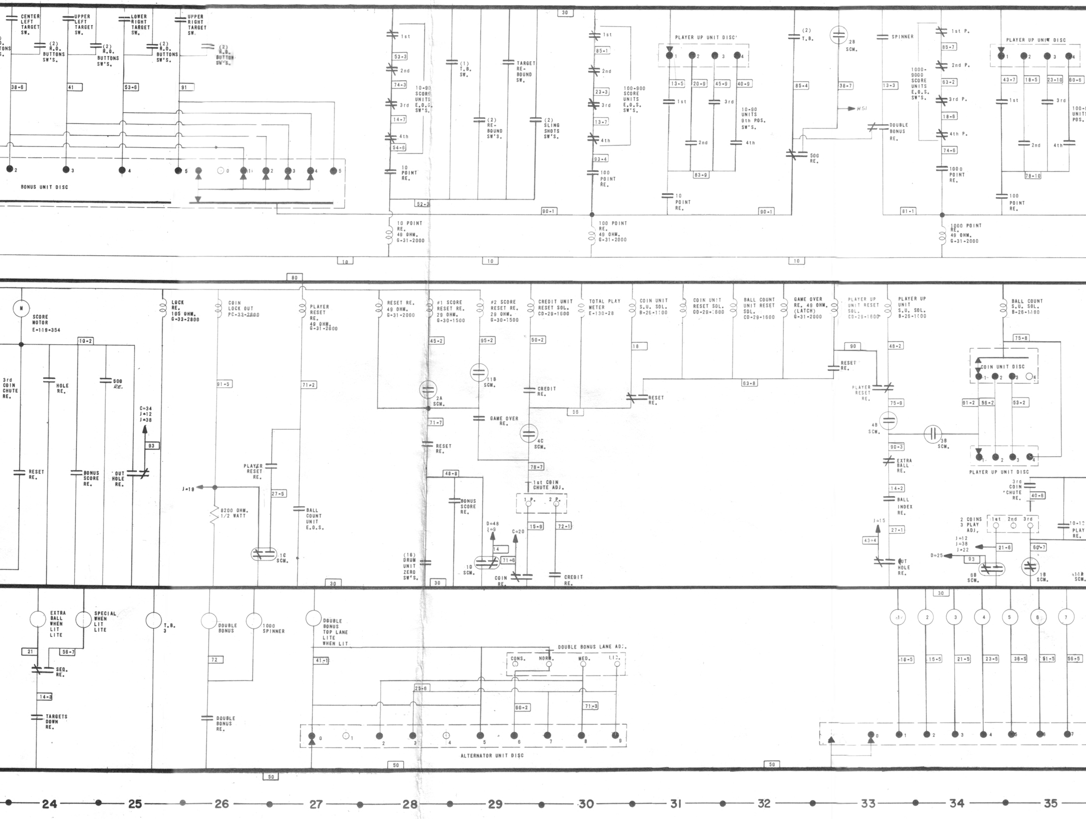
CENTER LEFT TARGET SW.
UPPER LEFT TARGET SW.
LOWER RIGHT TARGET SW.
UPPER RIGHT TARGET SW.
(2) R.O. BUTTONS SW'S.
BONUS UNIT DISC
1st
2nd
3rd
4th
10-90 SCORE UNITS E.O.S. SW'S.
10 POINT RE.
(1) T.B. SW.
TARGET RE-BOUND SW.
(2) RE-BOUND SW'S.
(2) SLING SHOTS SW'S.
10 POINT RE. 49 OHM. G-31-2000
100-900 SCORE UNITS E.O.S. SW'S.
100 POINT RE.
100 POINT RE. 49 OHM. G-31-2000
PLAYER UP UNIT DISC
10-90 UNITS 9th POS. SW'S.
(2) T.B.
2B SCM.
500 RE.
SPINNER
DOUBLE BONUS RE.
1000-9000 SCORE UNITS E.O.S. SW'S.
1st P.
2nd P.
3rd P.
4th P.
1000 POINT RE.
1000 POINT RE. 49 OHM. G-31-2000
100 POINT RE.
SCORE MOTOR E-119-354
3rd COIN CHUTE RE.
HOLE RE.
500 RE.
RESET RE.
BONUS SCORE RE.
OUT HOLE RE.
C-34
J-12
J-38
LOCK RE. 105 OHM. G-33-2800
COIN LOCK OUT PC-33-2800
J-19
8200 OHM. 1/2 WATT
1C SCM.
PLAYER RESET RE.
PLAYER RESET RE. 49 OHM. G-31-2000
BALL COUNT UNIT E.O.S.
RESET RE. 49 OHM. G-31-2000
2A SCM.
#1 SCORE RESET RE. 29 OHM. G-30-1500
#2 SCORE RESET RE. 29 OHM. G-30-1500
11B SCM.
GAME OVER RE.
(16) DRUM UNIT ZERO SW'S.
1D SCM.
D-48
J-9
C-20
COIN RE.
CREDIT UNIT RESET SOL. CD-29-1600
CREDIT RE.
4C SCM.
1st COIN CHUTE ADJ.
1 P.
2 P.
CREDIT RE.
TOTAL PLAY METER E-130-28
COIN UNIT S.U. SOL. B-26-1100
COIN UNIT RESET SOL. CD-29-1600
BALL COUNT UNIT RESET SOL. CD-29-1600
GAME OVER RE. 49 OHM. (LATCH) G-31-2000
PLAYER UP UNIT RESET SOL. CD-29-1600
PLAYER UP UNIT S.U. SOL. B-26-1100
RESET RE.
PLAYER RESET RE.
4B SCM.
EXTRA BALL RE.
BALL INDEX RE.
J-15
OUT HOLE RE.
D-25
BALL COUNT S.U. SOL. B-26-1100
COIN UNIT DISC
3B SCM.
PLAYER UP UNIT DISC
3rd COIN CHUTE RE.
2 COINS 3 PLAY ADJ.
J-12
J-38
J-22
6B SCM.
1B SCM.
EXTRA BALL WHEN LIT LITE
SPECIAL WHEN LIT LITE
SEQ. RE.
TARGETS DOWN RE.
T.B. 3
DOUBLE BONUS
1000 SPINNER
DOUBLE BONUS RE.
DOUBLE BONUS TOP LANE LITE WHEN LIT
DOUBLE BONUS LANE ADJ.
CONS.
NORM.
MED.
LIB.
ALTERNATOR UNIT DISC
10
30
50
80
24
25
26
27
28
29
30
31
32
33
34
35

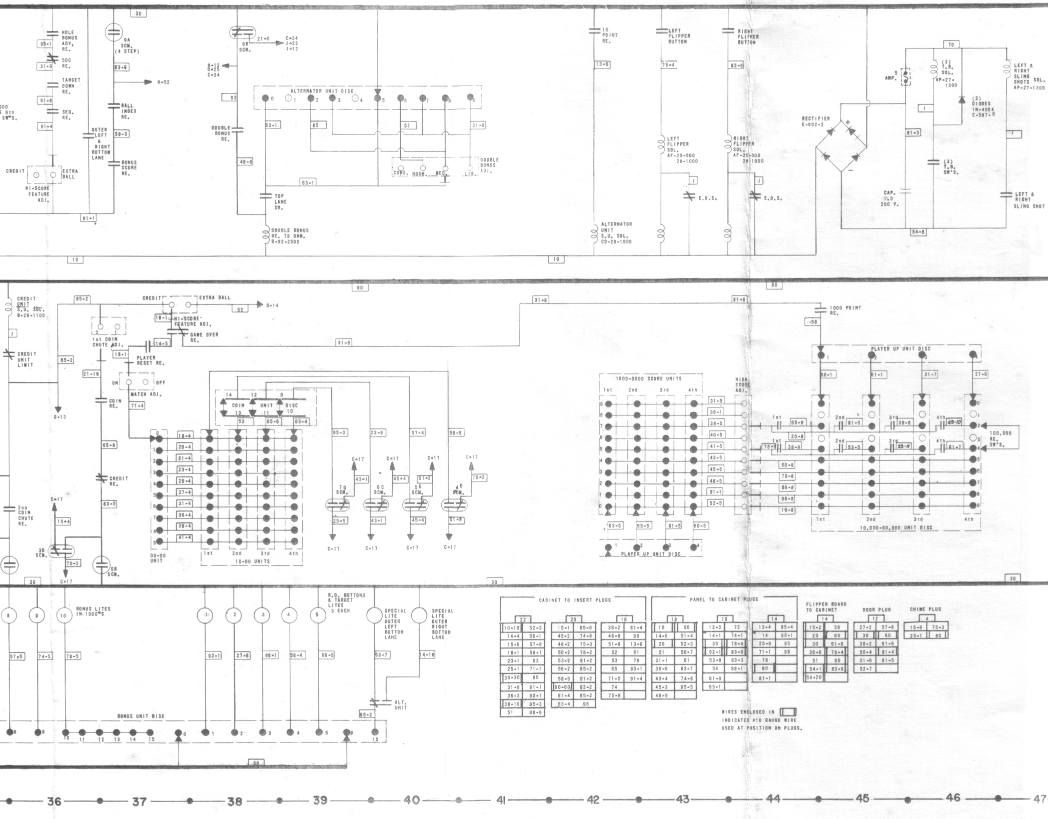
HOLE BONUS ADV. RE.
500 RE.
TARGET DOWN RE.
SEQ. RE.
CREDIT
EXTRA BALL
HI-SCORE FEATURE ADJ.
9A SCM. (4 STEP)
H-52
BALL INDEX RE.
OUTER LEFT & RIGHT BOTTOM LANE
BONUS SCORE RE.
6B SCM.
C-34 J-22 J-12
H-12 D-25 C-34
ALTERNATOR UNIT DISC
DOUBLE BONUS RE.
DOUBLE BONUS ADJ.
CONS. NORM. MED. LIB.
TOP LANE SW.
DOUBLE BONUS RE. 78 OHM. G-32-2500
10 POINT RE.
ALTERNATOR UNIT S.U. SOL. CD-29-1600
LEFT FLIPPER BUTTON
LEFT FLIPPER SOL. AF-25-500 28-1000
E.O.S.
RIGHT FLIPPER BUTTON
RIGHT FLIPPER SOL. AF-25-500 28-1000
RECTIFIER E-602-2
5 AMP.
CAP. 1.0 200 V.
(3) T.B. SOL. AP-27-1300
(3) DIODES 1N-4004 E-587-6
(3) T.B. SW'S.
LEFT & RIGHT SLING SHOTS SOL. AP-27-1300
LEFT & RIGHT SLING SHOT
CREDIT UNIT S.U. SOL. B-26-1100
CREDIT UNIT LIMIT
2nd COIN CHUTE RE.
3D SCM.
1st COIN CHUTE ADJ.
HI-SCORE FEATURE ADJ.
GAME OVER RE.
G-14
PLAYER RESET RE.
MATCH ADJ.
ON OFF
G-13
COIN RE.
CREDIT RE.
5B SCM.
COIN UNIT DISC
00-90 UNIT
10-90 UNITS
1st 2nd 3rd 4th
7D SCM.
6C SCM.
5D SCM.
4D SCM.
C-17
1000-9000 SCORE UNITS
HIGH SCORE ADJ.
PLAYER UP UNIT DISC
1000 POINT RE.
100,000 RE. SW'S.
10,000-90,000 UNIT DISC
BONUS LITES IN 1000'S
R.O. BUTTONS & TARGET LITES 3 EACH
SPECIAL LITE OUTER LEFT BOTTOM LANE
SPECIAL LITE OUTER RIGHT BOTTOM LANE
ALT. UNIT
BONUS UNIT DISC
10
30
50
80
36
37
38
39
40
41
42
43
44
45
46
47

CABINET TO INSERT PLUGS

22	
10-10	52-3
14-4	56-1
15-6	57-8
18-1	58-7
23-1	63
25-1	71-1
30-30	80
31-8	81-1
36-3	90-1
38-10	95-3
51	98-9

20	
15-1	65-6
45-2	74-8
48-2	75-3
50-2	78-2
53-2	81-2
56-2	85-2
58-5	91-2
60-60	93-2
61-4	95-2
63-4	96

18	
36-2	81-4
48-8	90
51-8	13-8
52	61
53	78
65	83-1
71-5	91-4
74	
75-8	

PANEL TO CABINET PLUGS

18	
10	50
14-6	51-4
20	52-3
21	56-7
31-1	61
36-6	63-7
43-4	74-8
45-3	95-5
48-9	

16	
13-3	72
14-1	74-1
30	78-4
52-1	83-6
53-8	93-3
54	98-1
61-9	
65-1	

14	
13-4	85-4
14	90-1
25-9	95
71-1	98
78	
80	
81-1	

FLIPPER BOARD TO CABINET

14	
15-2	56
20	60
30	61-6
36-6	78-4
51	80
54-1	83-6
54-20	

DOOR PLUG

12	
27-2	57-8
30	60
38-2	61-6
50-4	81-4
51-6	91-5
52-7	

CHIME PLUG

4	
15-6	75-3
25-1	80

WIRES ENCLOSED IN ▯ INDICATES #16 GAUGE WIRE USED AT POSITION ON PLUGS.

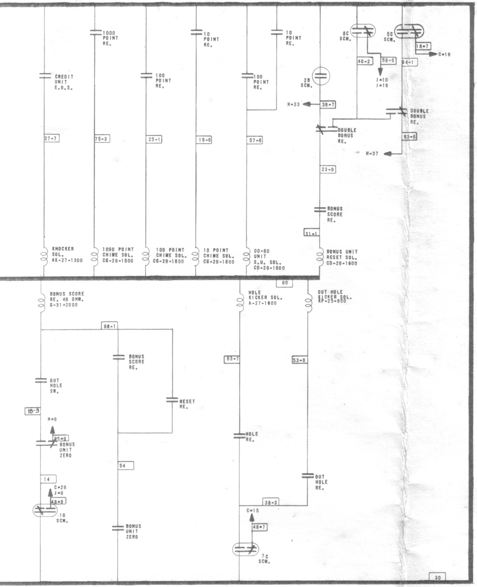
1000 POINT RE.
10 POINT RE.
10 POINT RE.
8C SCM.
5C SCM.
18-7
C-16
40-2
58-6
84-1
J-10
J-18
CREDIT UNIT E.O.S.
100 POINT RE.
100 POINT RE.
2B SCM.
H-33
38-7
DOUBLE BONUS RE.
DOUBLE BONUS RE.
27-7
75-3
25-1
15-6
57-6
63-6
H-37
23-9
BONUS SCORE RE.
31-1
KNOCKER SOL. AK-27-1300
1000 POINT CHIME SOL. CG-29-1600
100 POINT CHIME SOL. CG-29-1600
10 POINT CHIME SOL. CG-29-1600
00-90 UNIT S.U. SOL. CD-29-1600
BONUS UNIT RESET SOL. CD-29-1600
80
BONUS SCORE RE. 49 OHM. G-31-2000
HOLE KICKER SOL. A-27-1800
OUT HOLE KICKER SOL. AP-25-850
98-1
BONUS SCORE RE.
63-7
53-8
OUT HOLE SW.
RESET RE.
18-3
H-9
25-9
BONUS UNIT ZERO
HOLE RE.
54
14
OUT HOLE RE.
C-29
J-9
48-8
10 SCM.
38-3
C-15
48-7
BONUS UNIT ZERO
7C SCM.
30

HANG GLIDER
W-1042-148d
4 PLAYER
1079

WIRE COLOR CODE

```
1-RED -R-           6-BROWN -BR-
2-BLUE -BLU-        7-ORANGE -O-
3-YELLOW -Y-        8-BLACK -B-
4-GREEN -G-         9-GRAY
5-WHITE -W-         0-NO TRACER
J-JUMPER
1-FIRST NUMBER-BODY COLOR.
2-SECOND NUMBER-TRACER COLOR.
3-NUMBER AFTER DASH INDICATES
  RE-USE OF SAME COLOR WIRE.
EXAMPLE:  50   -WHITE
          51   -WHITE-RED
          51-1-WHITE-RED (USED AGAIN)
```

ALL INTERLOCK RELAYS
ARE IN LATCHED POSITION

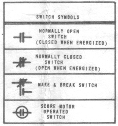
SWITCH SYMBOLS

NORMALLY OPEN SWITCH (CLOSED WHEN ENERGIZED)

NORMALLY CLOSED SWITCH (OPEN WHEN ENERGIZED)

MAKE & BREAK SWITCH

SCORE MOTOR OPERATED SWITCH

" HANG GLIDER "

COIL LOCATIONS CHART

NAME OF COIL	LOCATION
ALTERNATOR UNIT S.U. SOL.	G-42
BALL COUNT S.U. SOL.	F-35
BALL COUNT UNIT RESET SOL.	F-32
BALL INDEX RE.	G-11
BONUS SCORE RE.	F-48
BONUS UNIT RESET SOL.	G-51
BONUS UNIT S.U. SOL.	G-21
COIN LOCK OUT	F-26
COIN RE.	F-14
COIN UNIT RESET SOL.	F-31
COIN UNIT S.U. SOL.	F-31
CREDIT RE.	F-19
CREDIT UNIT RESET SOL.	F-30
CREDIT UNIT S.U. SOL.	F-36
DELAY RE.	F-13
DOUBLE BONUS RE.	G-38
DROP TARGET RESET SOL.	G-16
DRUM SCORE UNITS	F-4 TO F-12
EXTRA BALL RE.	G-12
GAME OVER RE. (LATCH)	F-33
GAME OVER RE. (TRIP)	G-8
HOLE BONUS ADV. RE.	A-20
HOLE KICKER SOL.	F-50
HOLE RE.	G-19
KNOCKER SOL.	G-47
LEFT FLIPPER SOL.	G-43
LEFT & RIGHT SLING SHOTS	H-47
LOCK RE.	F-26
OUT HOLE KICKER SOL.	F-51
OUT HOLE RE.	G-10
OVER THE TOP DELAY RE.	G-6
PLAYER RESET RE.	F-27
PLAYERS 100,000 RE.	G-4 TO G-5
PLAYER UP UNIT RESET SOL.	F-33
PLAYER UP UNIT S.U. SOL.	F-33
RESET RE.	F-28
RIGHT FLIPPER SOL.	G-43
SEQUENCE RE.	G-15
TARGETS DOWN RE.	G-17
THUMPER BUMPER SOL.	H-46
TILT RE.	G-14
TOTAL PLAY METER	F-30
2nd COIN CHUTE RE.	F-16
3rd COIN CHUTE RE.	F-15
2 COINS 3 PLAY	F-21
10 PT. CHIME SOL.	G-49
100 PT. CHIME SOL.	G-48
1000 PT. CHIME SOL.	G-48
10 PT. RE.	G-30
100 PT RE.	G-30
1000 PT. RE.	G-38
10-12 PLAY RE.	F-18
500 RE.	G-17
#1 SCORE RESET RE.	F-28
#2 SCORE RESET RE.	F-29
00-90 UNIT S.U. SOL.	G-50

Bally®

MANUFACTURING CORP.
2640 W. BELMONT AVE
CHICAGO, ILL. 60618

48 49 50 51 52