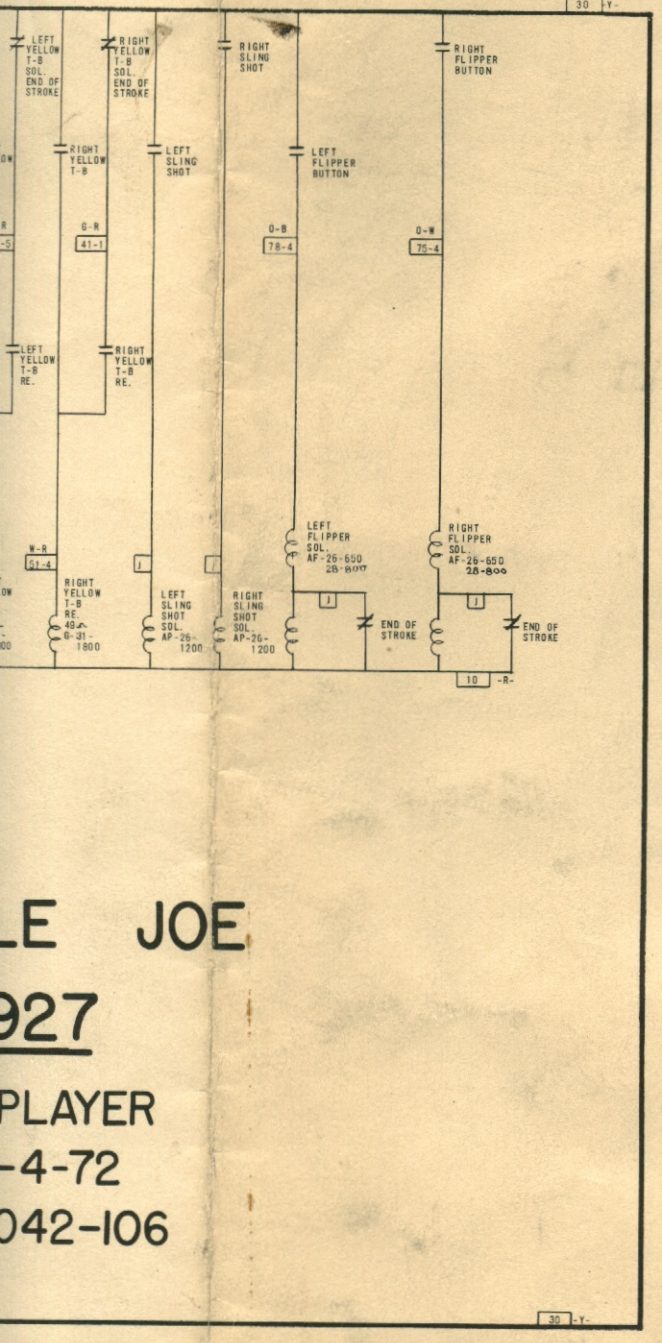

LE JOE

927

PLAYER

-4-72

042-106

CABINET TO INSERT PLUGS

20	
13-4	58-5
18	61
23-8	63
25-6	65
27-7	71-5
30	74
48-8	75-3
50-2	91-4
53-7	95-2
57-8	

16	
10	63-8
23-1	65-6
45-2	75-8
48-2	80
52-3	81
53	85-3
57-4	90-1
60	

14	
15-6	71-4
25-1	81-1
31-8	85-2
45-3	90
56-1	91-2
61-4	93-2
63-4	98-8

PANEL TO CABINET PLUGS

20	
15-5	75-4
21-1	78-1
31-1	81-6
36-6	83-6
40-4	85-6
50	90-6
52-1	91-6
53-8	93-3
54-2	98-6
71-4	

18	
10	54
14-3	57
18-1	61-8
20	71-1
30	78
36-5	83
41-2	85
48-1	93
52-2	

16	
21-5	57-1
23-5	71
31-6	78-4
38-10	80
40-1	90-1
51-5	91-1
52-3	93-1
54-1	98

FLIPPER PLUG

6	
30	75-4
36-6	78-4
54-4	

DOOR PLUG

12	
20	52-7
27-2	57-8
30	61-6
38-2	81-4
50-4	91-5
51-6	

1/2 WATT
8200 OHM.

WIRES ENCLOSED IN ▭ INDICATES #16 GAUGE WIRE USED AT POSITION ON PLUGS.

CHIME PLUG

4	
15-6	75-3
25-1	80

COIL LOCATIONS

NAME OF COIL	LOCATION
BALL COUNT UNIT RESET SOL.	E-10
BALL COUNT UNIT STEP UP SOL.	E-12
BALL INDEX RE.	F-10
COIN LOCKOUT COIL	E-8
COIN RE.	E-3
COIN UNIT RESET SOL.	E-10
COIN UNIT STEP UP SOL.	E-10
CREDIT RE.	E-6
CREDIT UNIT RESET SOL.	E-9
CREDIT UNIT STEP UP SOL.	E-15
DOWN POST RE.	F-25
EJECT HOLE RE.	E-31
EXTRA BALL RE.	F-9
EXTRA BALL TARGET RE.	F-34
GAME OVER RE. (LATCH)	F-5
GAME OVER RE. (TRIP)	F-8
HOLE EJECT SOL.	F-3
KNOCKER SOL.	E-14
LEFT FLIPPER SOL.	F-38
LEFT RED T-B RE.	F-35
LEFT RED T-B SOL.	F-2
LEFT SLINGSHOT SOL.	F-37
LEFT YELLOW T-B RE.	F-36
LEFT YELLOW T-B SOL.	F-3
LITE RED T-B RE.	F-21
LITE YELLOW T-B RE.	F-22
LOCK RE.	E-9
LOWER GATE RE.	F-11
LOWER GATE SOL.	F-5
M-B RE.	F-22
OPEN LOWER GATE TARGET RE.	F-33
OUTHOLE KICKER SOL.	F-4
OUTHOLE RE.	F-9
PLAYER RESET RE.	E-13
PLAYER UP UNIT RESET SOL.	E-11
PLAYER UP UNIT STEP UP SOL.	E-11
POST LATCH COIL	F-25
POST SOL.	F-4
RESET RE.	F-6
RIGHT FLIPPER SOL.	F-38
RIGHT RED T-B RE.	F-35
RIGHT RED T-B SOL.	F-2
RIGHT SLINGSHOT SOL.	F-37
RIGHT YELLOW T-B RE.	F-36
RIGHT YELLOW T-B SOL.	F-3
TILT RE.	F-11
TOP AREA EXIT RE.	F-24
TOTAL PLAY METER	E-9
TOTAL 4 RE.	F-20
TOTAL 7 OR 11 RE.	F-15
TOTAL 8 RE.	F-18
UPPER GATE RE.	F-10
UP POST RE.	F-24
00-90 UNIT STEP UP SOL.	E-13
1st DICE #1 RE.	F-12
1st DICE #2 RE.	F-12
1st DICE #3 RE.	F-13
1st DICE #4 RE.	F-13
1st DICE #5 RE.	F-14
1st DICE #6 RE.	F-14
#1 SCORE RESET RE.	F-6
#2 SCORE RESET RE.	F-6
2 COIN UNIT STEP UP SOL.	E-2
2nd COIN CHUTE RE.	E-4
3rd COIN CHUTE RE.	E-4
2nd DICE UNIT STEP UP SOL.	E-32
(16) UNIT STEP UP SOL.	
1st PLAYER 10-90	E-23
2nd PLAYER 10-90	E-24
3rd PLAYER 10-90	E-24
4th PLAYER 10-90	E-25
1st PLAYER 100-900	E-25
2nd PLAYER 100-900	E-26
3rd PLAYER 100-900	E-26
4th PLAYER 100-900	E-27
1st PLAYER 1000-9000	E-27
2nd PLAYER 1000-9000	E-28
3rd PLAYER 1000-9000	E-28
4th PLAYER 1000-9000	E-29
1st PLAYER 10,000-90,000	E-29
2nd PLAYER 10,000-90,000	E-30
3rd PLAYER 10,000-90,000	E-30
4th PLAYER 10,000-90,000	E-31
10 POINT CHIME SOL.	E-33
100 POINT CHIME SOL.	E-33
1000 POINT CHIME SOL.	E-34
10 POINT RE.	F-33
100 POINT RE.	F-29
500 POINT RE.	F-23
1000 POINT RE.	F-26
3000 POINT RE.	F-23

Bally®

MANUFACTURING CORP.
2640 W. BELMONT AVE.
CHICAGO, ILL. 60618

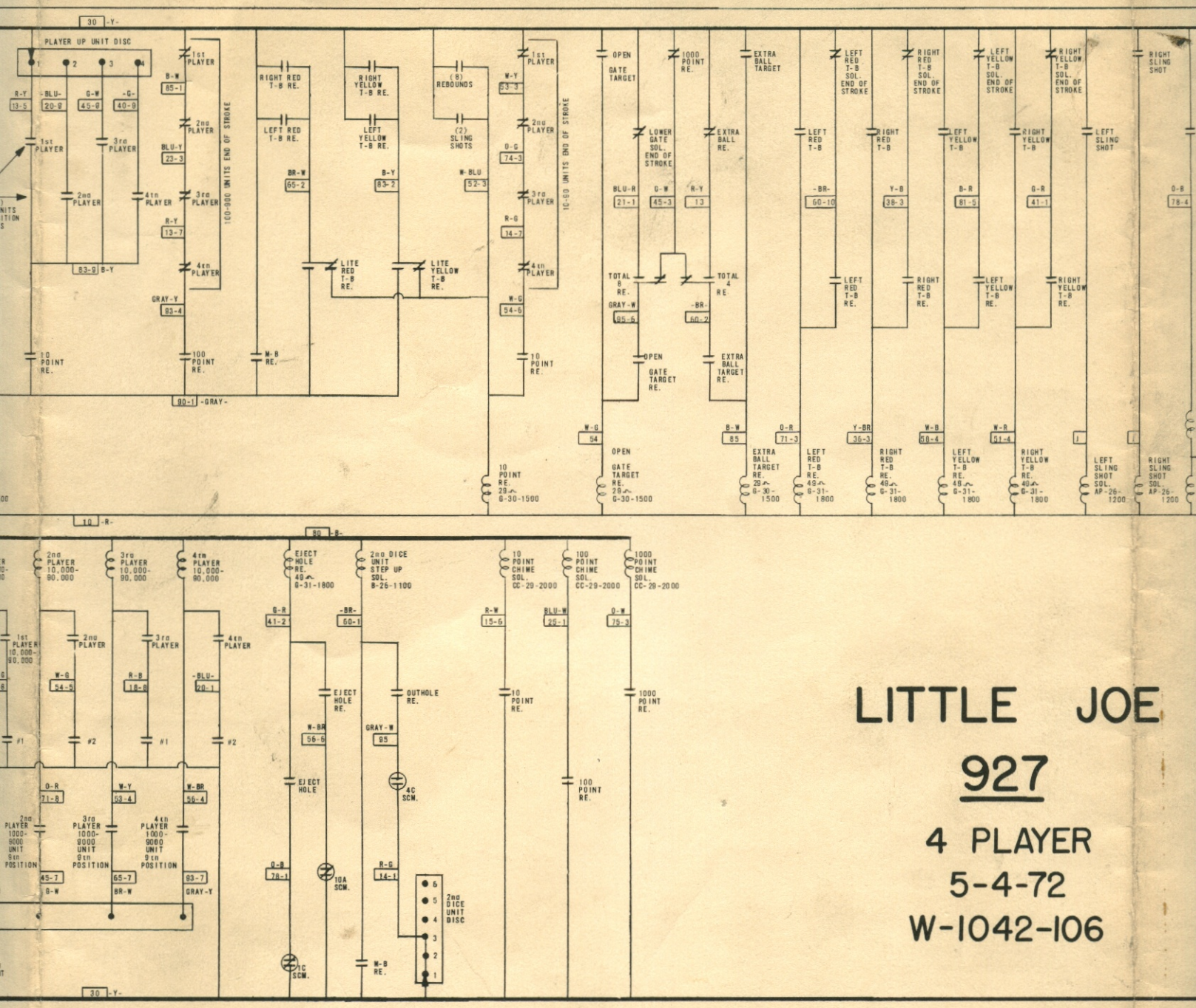

LITTLE JOE

927

4 PLAYER

5-4-72

W-1042-106

30 31 32 33 34 35 36 37

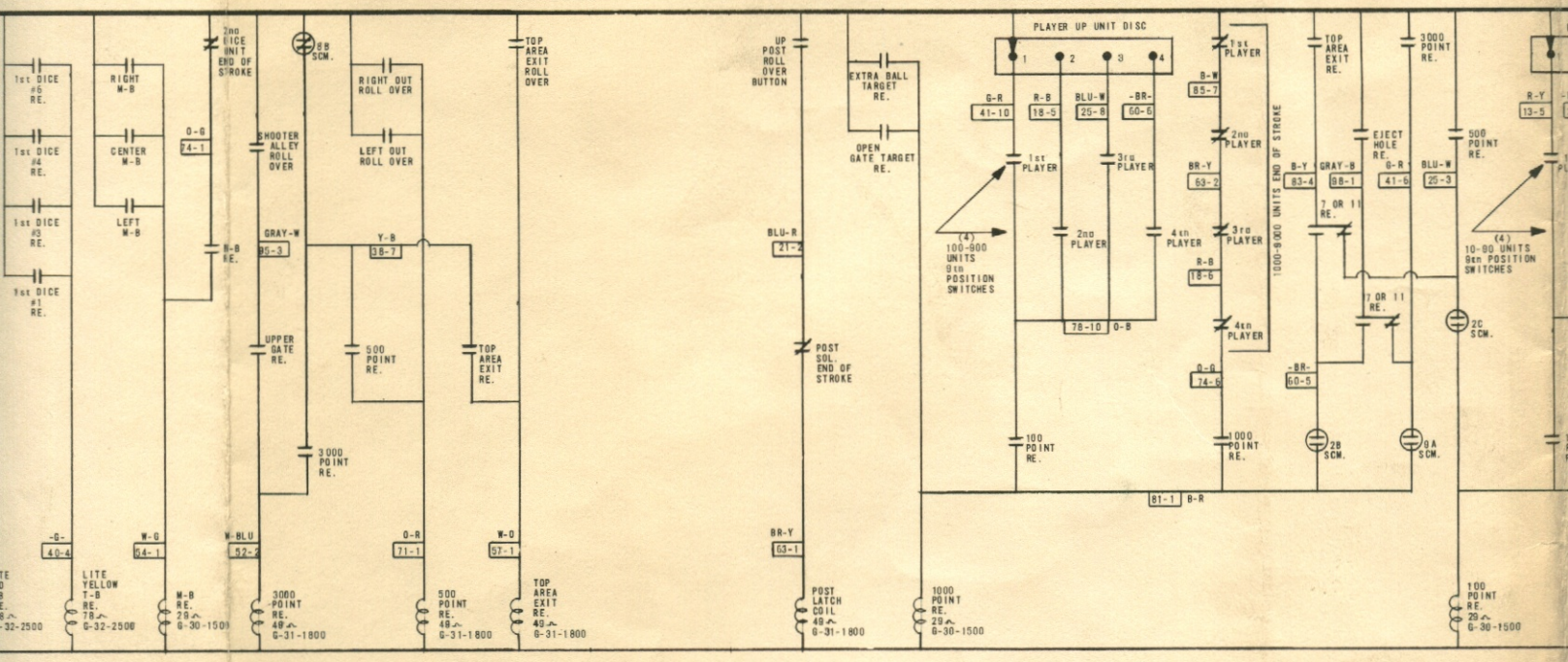

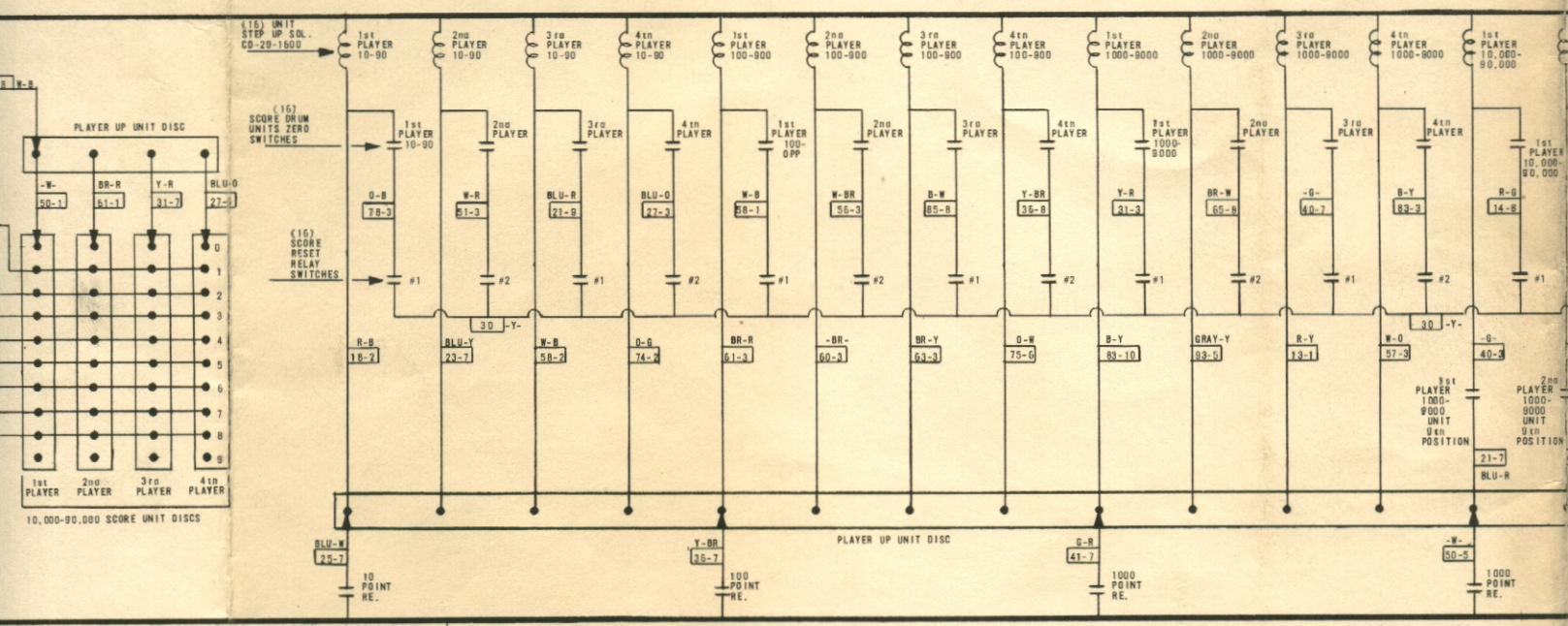

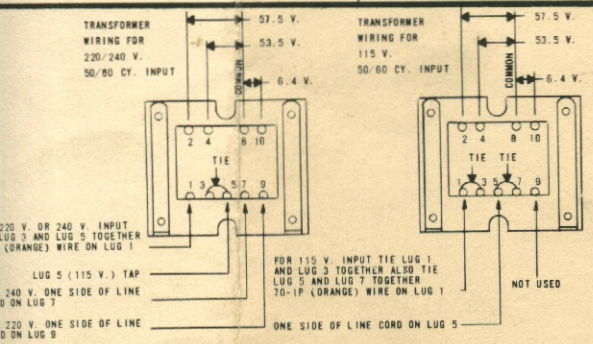

SWITCH SYMBOLS

- NORMALLY OPEN SWITCH (CLOSED WHEN ENERGIZED)
- NORMALLY CLOSED SWITCH (OPEN WHEN ENERGIZED)
- MAKE & BREAK SWITCH
- SCORE MOTOR OPERATED SWITCH

WIRE COLOR CODE

1-RED -R-
2-BLUE -BLU-
3-YELLOW -Y-
4-GREEN -G-
5-WHITE -W-
J-JUMPER

6-BROWN -BR-
7-ORANGE -O-
8-BLACK -B-
9-GRAY
0-NO TRACER

1-FIRST NUMBER-BODY COLOR
2-SECOND NUMBER-TRACER COLOR
3-NUMBER AFTER DASH INDICATES RE-USE OF SAME COLOR WIRE

EX. 50 -WHITE
51 -WHITE-RED
51-1-WHITE-RED (USED AGAIN)

SEQUENCE OF OPERATION OF SCORE MOTOR SWITCHES

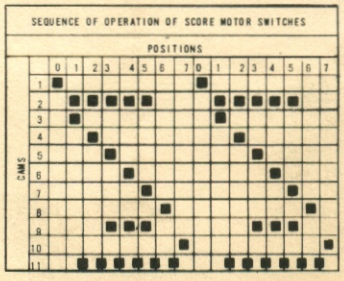

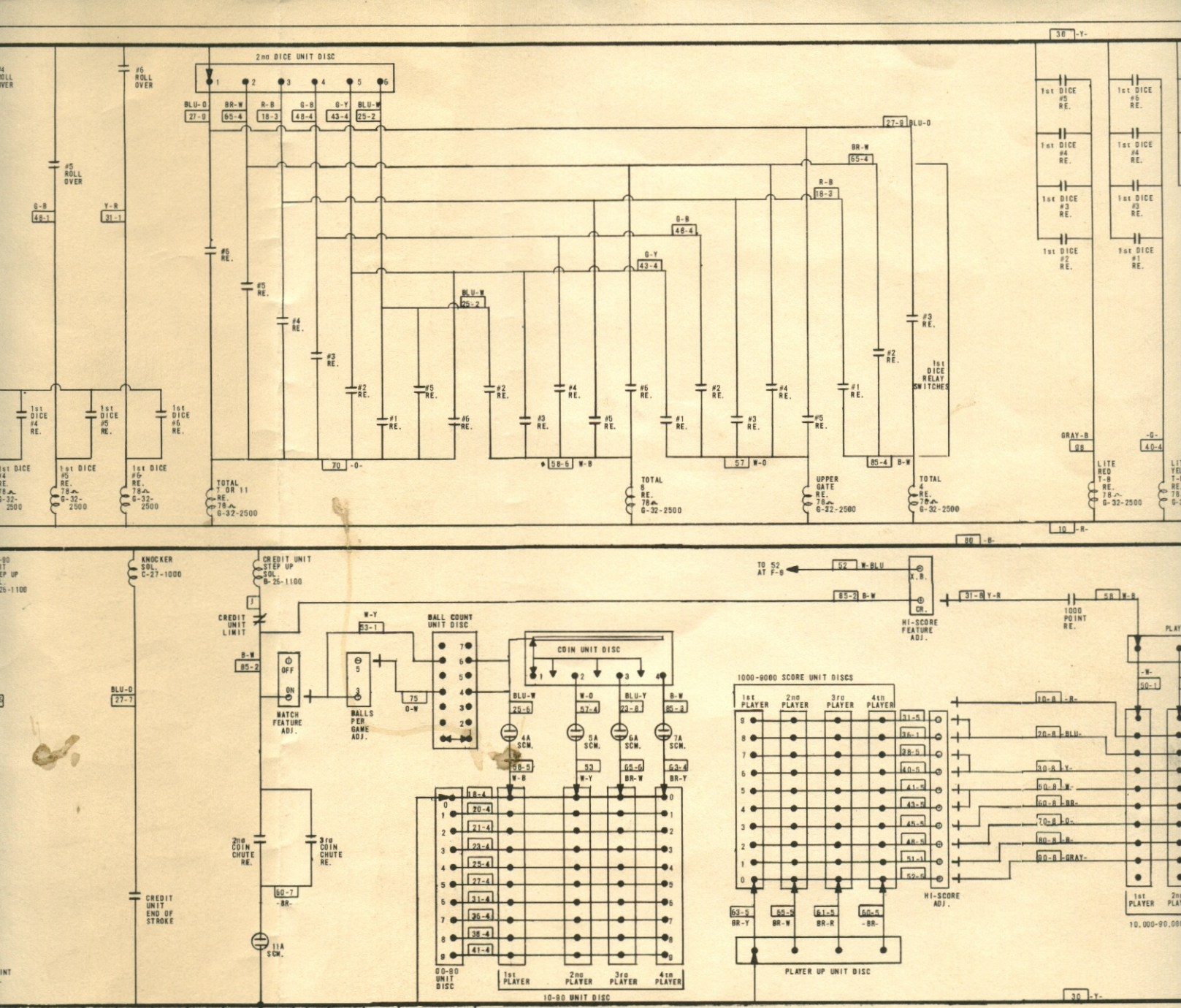
2nd DICE UNIT DISC
#6 ROLL OVER
#5 ROLL OVER
G-B 48-1
Y-R 31-1
BLU-O 27-9
BR-W 65-4
R-B 18-3
G-B 48-4
G-Y 43-4
BLU-W 25-2
27-9 BLU-O
BR-W 65-4
R-B 18-3
G-B 48-4
G-Y 43-4
BLU-W 25-2
1st DICE RELAY SWITCHES
1st DICE #5 RE.
1st DICE #4 RE.
1st DICE #3 RE.
1st DICE #2 RE.
1st DICE #1 RE.
1st DICE #6 RE.
1st DICE #4 RE.
1st DICE #5 RE.
1st DICE #6 RE.
1st DICE #5 RE. 78Ω G-32-2500
1st DICE #6 RE. 78Ω G-32-2500
TOTAL 7 OR 11 RE. 78Ω G-32-2500
70 -O-
58-6 W-B
TOTAL 8 RE. 78Ω G-32-2500
57 W-O
UPPER GATE RE. 78Ω G-32-2500
85-4 B-W
TOTAL 4 RE. 78Ω G-32-2500
GRAY-B 98
LITE RED T-B RE. 78Ω G-32-2500
-G- 40-4
36 -Y-
10 -R-
80 -B-
KNOCKER SOL. C-27-1000
CREDIT UNIT STEP UP SOL. B-26-1100
CREDIT UNIT LIMIT
B-W 85-2
BLU-O 27-7
OFF
ON
MATCH FEATURE ADJ.
W-Y 53-1
BALLS PER GAME ADJ.
75 O-W
BALL COUNT UNIT DISC
COIN UNIT DISC
BLU-W 25-6
W-O 57-4
BLU-Y 23-8
B-W 85-2
4A SCM.
5A SCM.
6A SCM.
7A SCM.
58-5 W-B
53 W-Y
65-6 BR-W
63-4 BR-Y
2nd COIN CHUTE RE.
3rd COIN CHUTE RE.
60-7 -BR-
11A SCM.
CREDIT UNIT END OF STROKE
00-90 UNIT DISC
1st PLAYER
2nd PLAYER
3rd PLAYER
4th PLAYER
10-90 UNIT DISC
TO 52 AT F-6
52 W-BLU
85-2 B-W
X.B.
CR.
HI-SCORE FEATURE ADJ.
31-8 Y-R
1000 POINT RE.
58 W-B
1000-9000 SCORE UNIT DISCS
31-5
36-1
38-5
40-5
41-5
43-5
45-5
48-5
51-1
52-5
HI-SCORE ADJ.
10-8 -R-
20-8 -BLU-
30-8 -Y-
50-8 -W-
60-8 -BR-
70-8 -O-
80-8 -R-
90-8 -GRAY-
-W- 50-1
10,000-90,000
63-5 BR-Y
65-5 BR-W
61-5 BR-R
60-5 -BR-
PLAYER UP UNIT DISC
30 -Y-
TOTAL 5 RE.
UPPER GATE RE.
G-Y 43-2
LOWER GATE RE.
W-B 58-3
LOWER GATE SOL. END OF STROKE
POST SOL. END OF STROKE
O-R 71-4
SHOOT AGAIN (PANEL)
SHOOT AGAIN (INSERT)
R-W 15-5
W-G 54-2
BLU-R 21-5
BLU-Y 23-5
Y-BR 36-5
W-R 51-5
1st DICE RE. SWITCHES
2nd DICE UNIT DISC
GRAY-B 98-6
GRAY-R 91-6
-GRAY- 90-6
B-W 85-6
B-Y 83-6
B-R 81-6
OPEN LOWER GATE TARGET
UPPER GATE OPEN
LOWER GATE OPEN
POST
EXTRA BALL RE.
1st DICE #1
1st DICE #2
1st DICE #3
1st DICE #4
1st DICE #5
1st DICE #6
2nd DICE #1
2nd DICE #2
2nd DICE #3
2nd DICE #4
2nd DICE #5
2nd DICE #6
20 -BLU-
GAME OVER RE.
90 -W-
FOR 220 V. OR 240 V.
TIE LUG 3 AND LUG 5 TO
70-1 (ORANGE) WIRE ON
LUG 5 (115
FOR 240 V. ONE SIDE
CORD ON LUG 7
FOR 220 V. ONE SIDE
CORD ON LUG 9
14
15
16
17
18
19
20
21

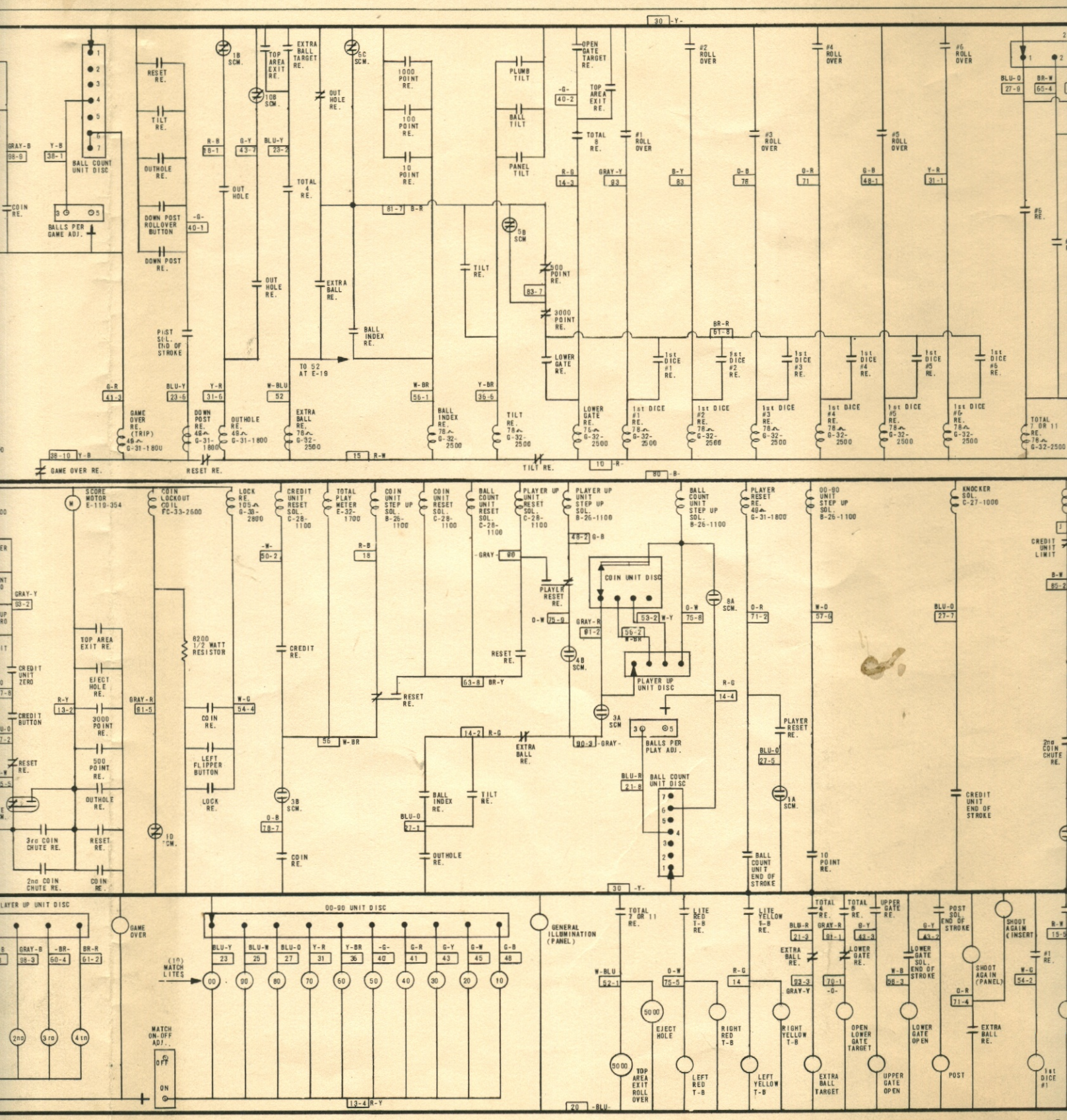
BALL COUNT UNIT DISC
BALLS PER GAME ADJ.
COIN RE.
RESET RE.
TILT RE.
OUTHOLE RE.
DOWN POST ROLLOVER BUTTON
DOWN POST RE.
1B SCM.
10B SCM.
OUT HOLE
OUT HOLE RE.
TOP AREA EXIT RE.
EXTRA BALL TARGET RE.
TOTAL 4 RE.
EXTRA BALL RE.
5C SCM.
1000 POINT RE.
100 POINT RE.
10 POINT RE.
BALL INDEX RE.
PIST SOL. END OF STROKE
TO S2 AT E-19
PLUMB TILT
BALL TILT
PANEL TILT
5B SCM
500 POINT RE.
3000 POINT RE.
LOWER GATE RE.
OPEN GATE TARGET RE.
TOTAL 8 RE.
#1 ROLL OVER
#2 ROLL OVER
#3 ROLL OVER
#4 ROLL OVER
#5 ROLL OVER
#6 ROLL OVER
#6 RE.
1st DICE #1 RE.
1st DICE #2 RE.
1st DICE #3 RE.
1st DICE #4 RE.
1st DICE #5 RE.
1st DICE #6 RE.
GAME OVER RE. (TRIP)
DOWN POST RE.
OUTHOLE RE.
EXTRA BALL RE.
BALL INDEX RE.
TILT RE.
LOWER GATE RE.
TOTAL 7 OR 11 RE.
GAME OVER RE.
RESET RE.
SCORE MOTOR E-119-354
COIN LOCKOUT COIL FC-33-2600
LOCK RE. 105Ω G-38-2800
CREDIT UNIT RESET SOL. C-28-1100
TOTAL PLAY METER E-32-1700
COIN UNIT STEP UP SOL. 8-26-1100
COIN UNIT RESET SOL. C-28-1100
BALL COUNT UNIT RESET SOL. C-28-1100
PLAYER UP UNIT RESET SOL. C-28-1100
PLAYER UP UNIT STEP UP SOL. 8-26-1100
BALL COUNT UNIT STEP UP SOL. 8-26-1100
PLAYER RESET RE. 48Ω G-31-1800
00-90 UNIT STEP UP SOL. 8-26-1100
KNOCKER SOL. C-27-1000
CREDIT UNIT LIMIT
CREDIT UNIT ZERO
CREDIT BUTTON
TOP AREA EXIT RE.
EJECT HOLE RE.
3000 POINT RE.
500 POINT RE.
OUTHOLE RE.
RESET RE.
3rd COIN CHUTE RE.
2nd COIN CHUTE RE.
COIN RE.
LEFT FLIPPER BUTTON
LOCK RE.
8200 1/2 WATT RESISTOR
CREDIT RE.
3B SCM.
1D SCM.
COIN UNIT DISC
PLAYER UP UNIT DISC
PLAYER RESET RE.
8A SCM.
4B SCM.
3A SCM
1A SCM.
BALLS PER PLAY ADJ.
BALL COUNT UNIT DISC
EXTRA BALL RE.
BALL INDEX RE.
TILT RE.
OUTHOLE RE.
BALL COUNT UNIT END OF STROKE
10 POINT RE.
2nd COIN CHUTE RE.
CREDIT UNIT END OF STROKE
PLAYER UP UNIT DISC
GAME OVER
00-90 UNIT DISC
(10) MATCH LITES
MATCH ON-OFF ADJ.
OFF
ON
GENERAL ILLUMINATION (PANEL)
TOTAL 7 OR 11 RE.
LITE RED T-B RE.
LITE YELLOW T-B RE.
TOTAL 4 RE.
TOTAL 8 RE.
UPPER GATE RE.
POST SOL END OF STROKE
SHOOT AGAIN (INSERT)
SHOOT AGAIN (PANEL)
LOWER GATE SOL. END OF STROKE
LOWER GATE RE.
EXTRA BALL RE.
5000
EJECT HOLE
RIGHT RED T-B
RIGHT YELLOW T-B
OPEN LOWER GATE TARGET
LOWER GATE OPEN
POST
TOP AREA EXIT ROLL OVER
LEFT RED T-B
LEFT YELLOW T-B
EXTRA BALL TARGET
UPPER GATE OPEN
7
8
9
10
11
12
13
14
15

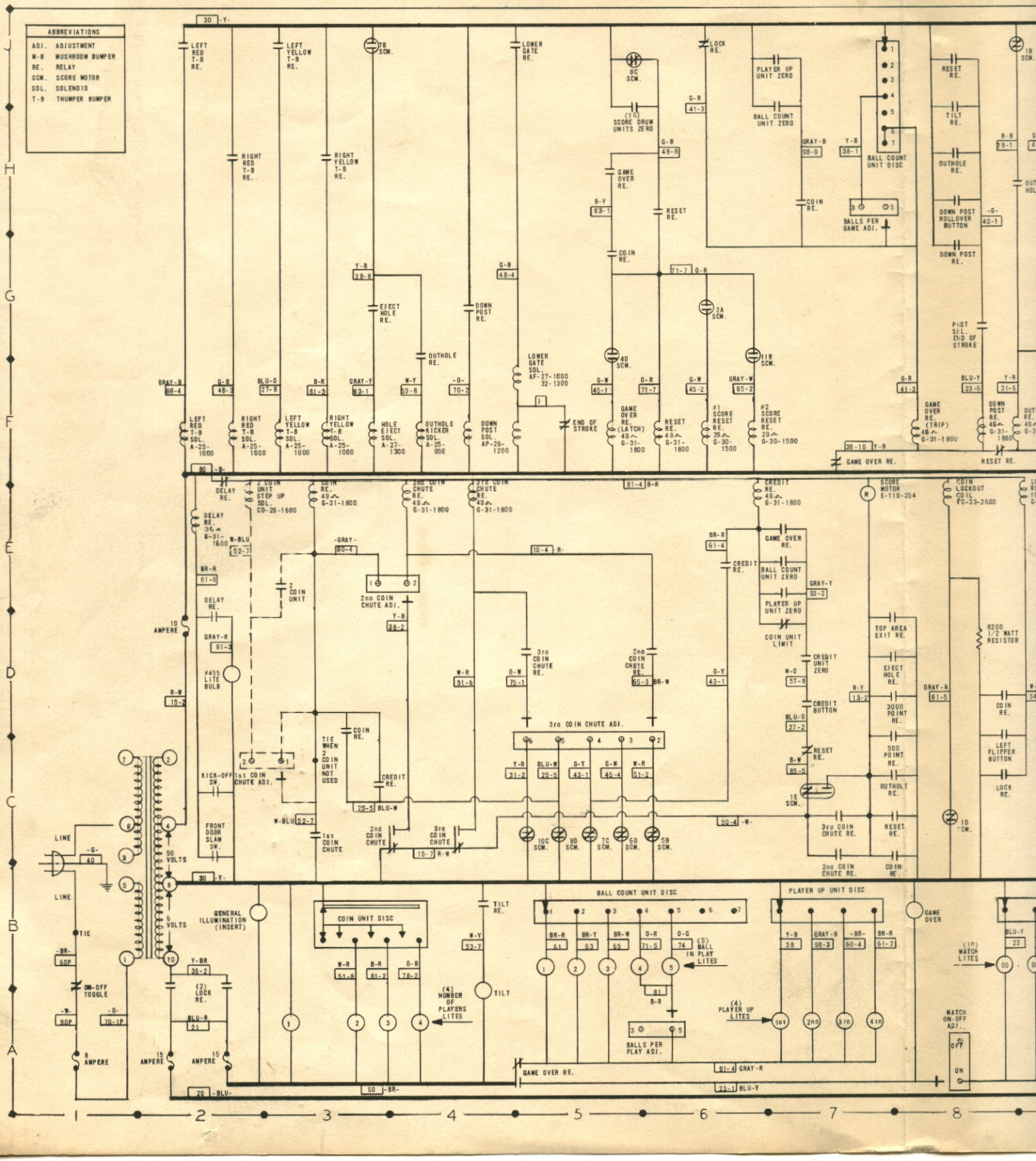
ABBREVIATIONS
ADJ. ADJUSTMENT
M-B MUSHROOM BUMPER
RE. RELAY
SCM. SCORE MOTOR
SOL. SOLENOID
T-B THUMPER BUMPER
LEFT RED T-B RE.
LEFT YELLOW T-B RE.
RIGHT RED T-B RE.
RIGHT YELLOW T-B RE.
7B SCM.
LOWER GATE RE.
8C SCM.
(16) SCORE DRUM UNITS ZERO
LOCK RE.
PLAYER UP UNIT ZERO
BALL COUNT UNIT ZERO
BALL COUNT UNIT DISC
BALLS PER GAME ADJ.
RESET RE.
TILT RE.
OUTHOLE RE.
DOWN POST ROLLOVER BUTTON
DOWN POST RE.
1B SCM.
GAME OVER RE.
COIN RE.
EJECT HOLE RE.
DOWN POST RE.
OUTHOLE RE.
LOWER GATE SOL. AF-27-1000 32-1300
2A SCM.
4D SCM.
11B SCM.
PIST SOL. END OF STROKE
LEFT RED T-B SOL. A-25-1000
RIGHT RED T-B SOL. A-25-1000
LEFT YELLOW T-B SOL. A-25-1000
RIGHT YELLOW T-B SOL. A-27-1000
HOLE EJECT SOL. A-27-1300
OUTHOLE KICKER SOL. A-25-950
DOWN POST SOL. AP-26-1200
END OF STROKE
GAME OVER RE. (LATCH) 49Ω G-31-1800
RESET RE. 49Ω G-31-1800
#1 SCORE RESET RE. 29Ω G-30-1500
#2 SCORE RESET RE. 29Ω G-30-1500
GAME OVER RE. (TRIP) G-31-1800
DOWN POST RE. 49Ω G-31-1800
GAME OVER RE.
RESET RE.
DELAY RE.
2 COIN UNIT STEP UP SOL. CD-29-1600
COIN RE. 49Ω G-31-1800
2nd COIN CHUTE RE. 49Ω G-31-1800
3rd COIN CHUTE RE. 49Ω G-31-1800
CREDIT RE. 49Ω G-31-1800
SCORE MOTOR E-119-354
COIN LOCKOUT COIL FC-33-2500
DELAY RE. 36Ω G-31-1600
2 COIN UNIT
2nd COIN CHUTE ADJ.
GAME OVER RE.
BALL COUNT UNIT ZERO
PLAYER UP UNIT ZERO
CREDIT RE.
COIN UNIT LIMIT
CREDIT UNIT ZERO
CREDIT BUTTON
TOP AREA EXIT RE.
EJECT HOLE RE.
3000 POINT RE.
500 POINT RE.
OUTHOLE RE.
RESET RE.
3rd COIN CHUTE RE.
2nd COIN CHUTE RE.
COIN RE.
8200 1/2 WATT RESISTOR
COIN RE.
LEFT FLIPPER BUTTON
LOCK RE.
10 AMPERE
#455 LITE BULB
KICK-OFF SW.
FRONT DOOR SLAM SW.
1st COIN CHUTE ADJ.
TIE WHEN 2 COIN UNIT NOT USED
COIN RE.
CREDIT RE.
3rd COIN CHUTE ADJ.
1st COIN CHUTE
2nd COIN CHUTE
3rd COIN CHUTE
10C SCM.
8D SCM.
7C SCM.
6D SCM.
5B SCM.
1E SCM.
1D SCM.
LINE
50 VOLTS
6 VOLTS
TIE
ON-OFF TOGGLE
8 AMPERE
15 AMPERE
15 AMPERE
(2) LOCK RE.
GENERAL ILLUMINATION (INSERT)
COIN UNIT DISC
TILT RE.
TILT
(4) NUMBER OF PLAYERS LITES
BALL COUNT UNIT DISC
(5) BALL IN PLAY LITES
BALLS PER PLAY ADJ.
PLAYER UP UNIT DISC
(4) PLAYER UP LITES
GAME OVER
(10) MATCH LITES
MATCH ON-OFF ADJ.
OFF
ON
GAME OVER RE.
1 2 3 4 5 6 7 8

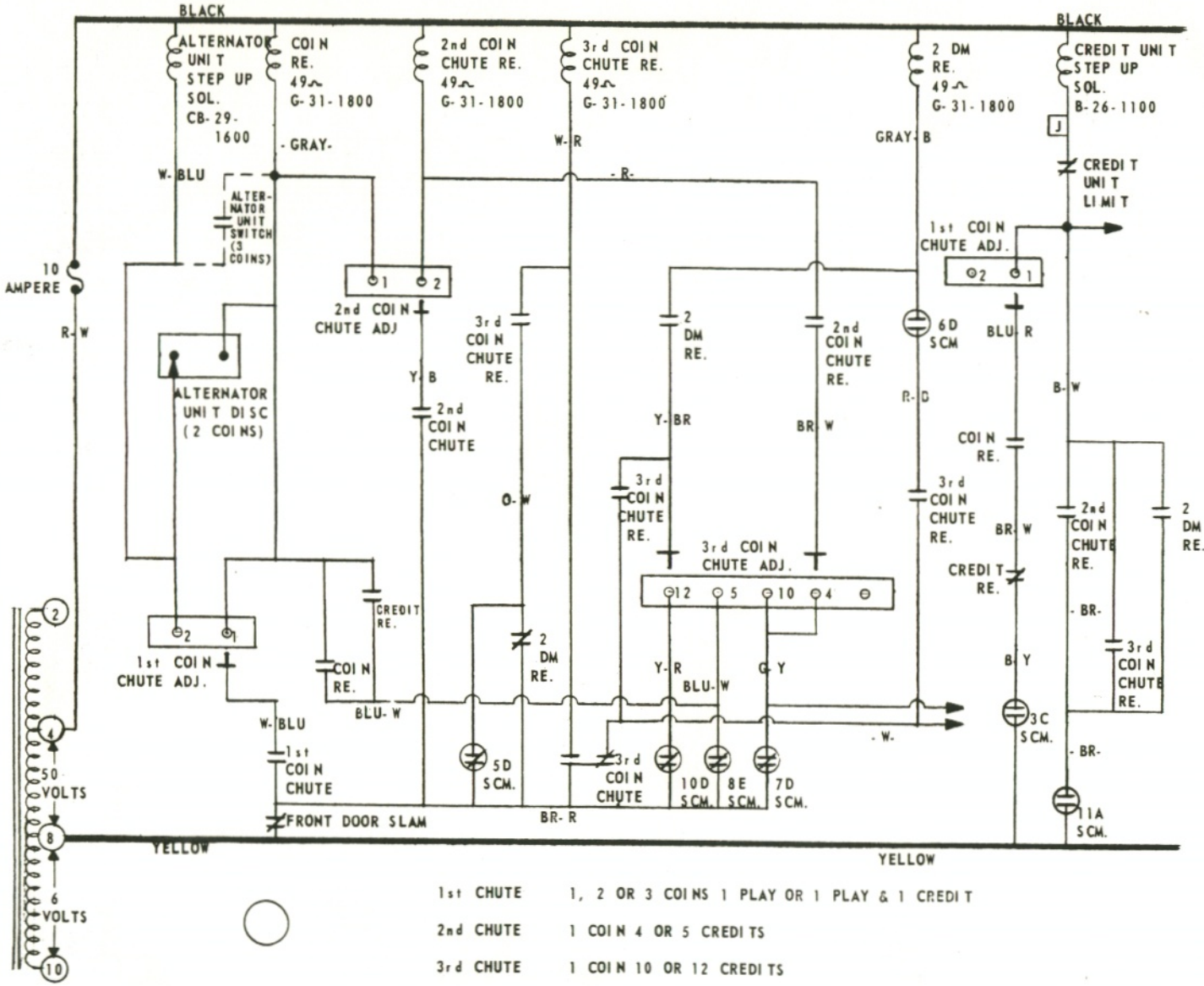

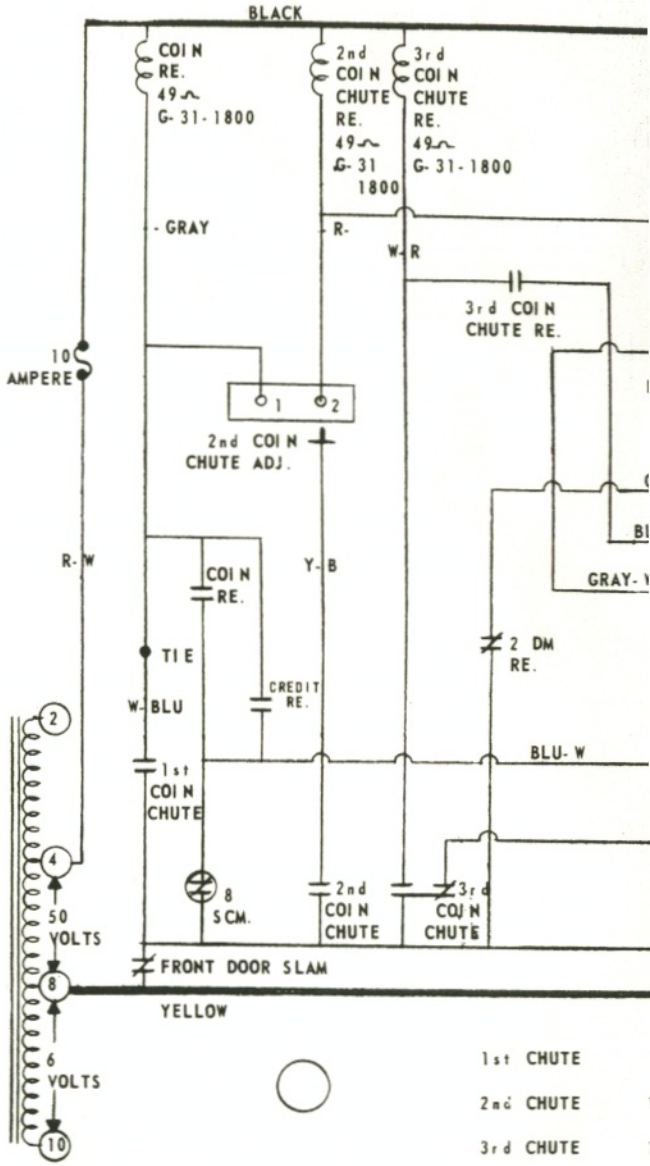

Bally®

MANUFACTURING CORP.
2640 W. BELMONT AVE.
CHICAGO, ILL. 60618

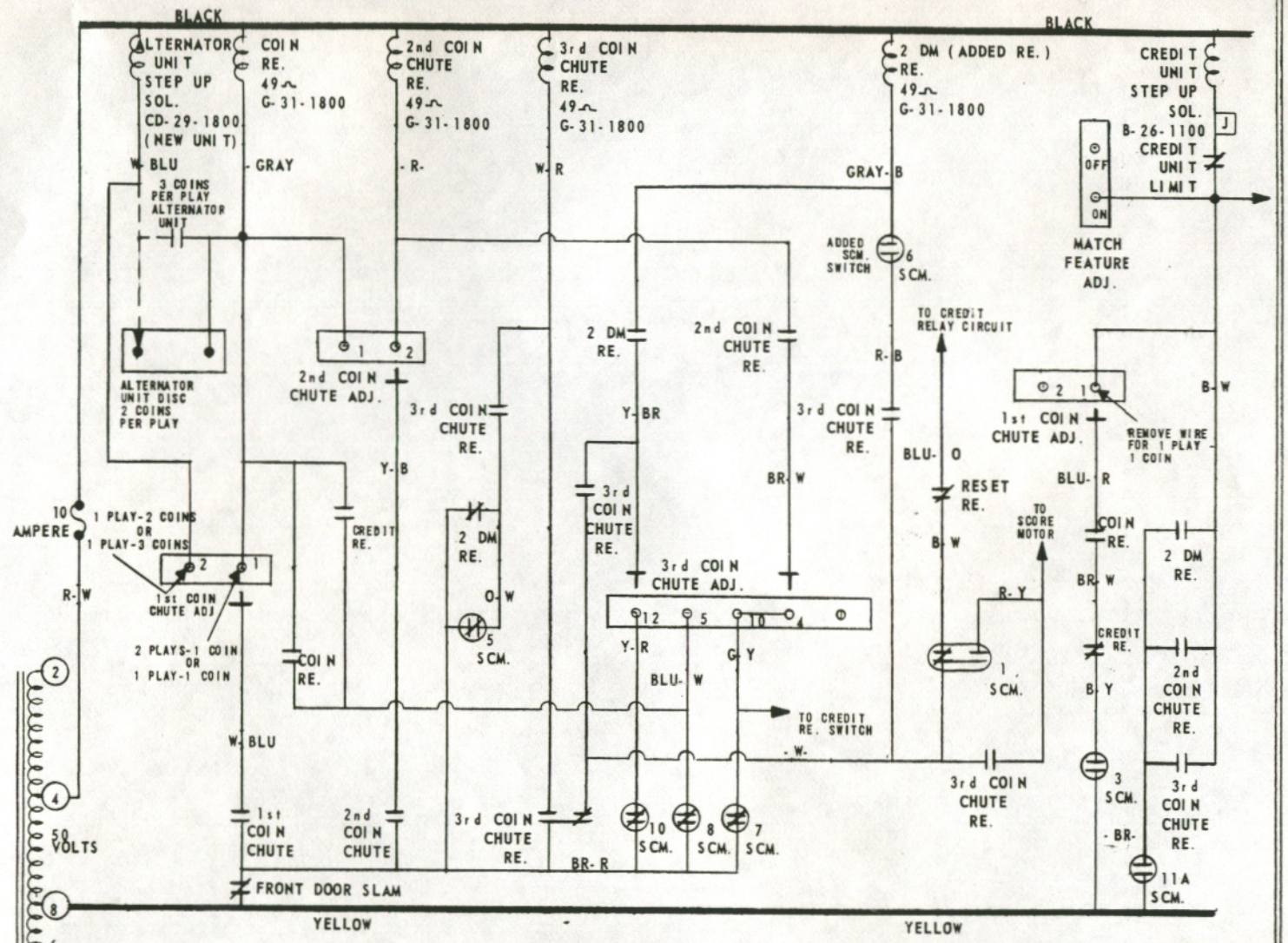
BLACK
ALTERNATOR UNIT STEP UP SOL. CD-29-1800 (NEW UNIT)
COIN RE. 49Ω G-31-1800
2nd COIN CHUTE RE. 49Ω G-31-1800
3rd COIN CHUTE RE. 49Ω G-31-1800
2 DM (ADDED RE.) RE. 49Ω G-31-1800
CREDIT UNIT STEP UP SOL. B-26-1100
CREDIT UNIT LIMIT
OFF
ON
MATCH FEATURE ADJ.
W-BLU
GRAY
R
W-R
GRAY-B
3 COINS PER PLAY ALTERNATOR UNIT
ADDED SCM. SWITCH
6 SCM.
ALTERNATOR UNIT DISC 2 COINS PER PLAY
2nd COIN CHUTE ADJ.
2 DM RE.
2nd COIN CHUTE RE.
TO CREDIT RELAY CIRCUIT
R-B
3rd COIN CHUTE RE.
Y-BR
Y-B
BR-W
BLU-O
1st COIN CHUTE ADJ.
REMOVE WIRE FOR 1 PLAY - 1 COIN
B-W
BLU-R
10 AMPERE
1 PLAY-2 COINS OR 1 PLAY-3 COINS
CREDIT RE.
RESET RE.
TO SCORE MOTOR
COIN RE.
2 DM RE.
R-W
1st COIN CHUTE ADJ
3rd COIN CHUTE ADJ.
R-Y
BR-W
O-W
5 SCM.
CREDIT RE.
2 PLAYS-1 COIN OR 1 PLAY-1 COIN
COIN RE.
Y-R
G-Y
BLU-W
1 SCM.
B-Y
2nd COIN CHUTE RE.
TO CREDIT RE. SWITCH
W-BLU
3rd COIN CHUTE RE.
3 SCM.
3rd COIN CHUTE RE.
50 VOLTS
1st COIN CHUTE
2nd COIN CHUTE
3rd COIN CHUTE RE.
BR-R
10 SCM.
8 SCM.
7 SCM.
BR-
11A SCM.
FRONT DOOR SLAM
YELLOW
6 VOLTS
1st CHUTE 1, 2 OR 3 COINS 1 PLAY OR 1 COIN 1 PLAY & 1 CREDIT
2nd CHUTE 1 COIN 1 PLAY OR 1 COIN 2, 4 OR 5 CREDITS
3rd CHUTE 1 COIN 10 OR 12 CREDITS

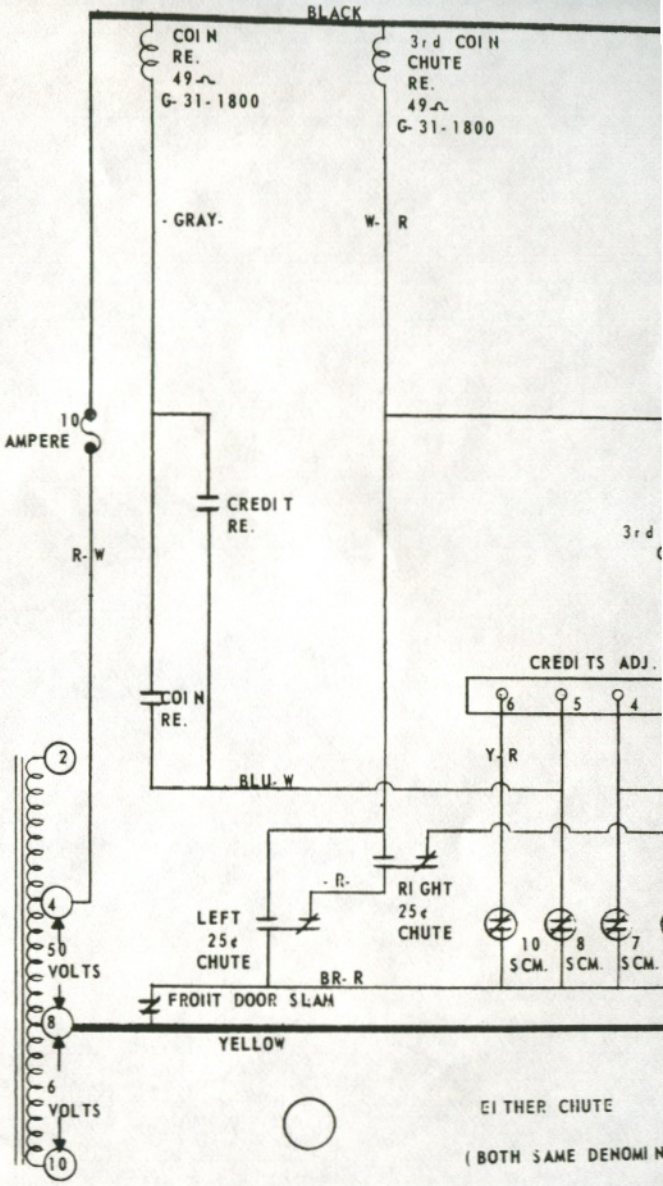
BLACK
COIN RE. 49Ω G-31-1800
3rd COIN CHUTE RE. 49Ω G-31-1800
GRAY
W-R
10 AMPERE
CREDIT RE.
R-W
3rd
CREDITS ADJ.
COIN RE.
Y-R
BLU-W
LEFT 25¢ CHUTE
RIGHT 25¢ CHUTE
BR-R
10 SCM.
8 SCM.
7 SCM.
50 VOLTS
FRONT DOOR SLAM
YELLOW
6 VOLTS
EITHER CHUTE
(BOTH SAME DENOMI

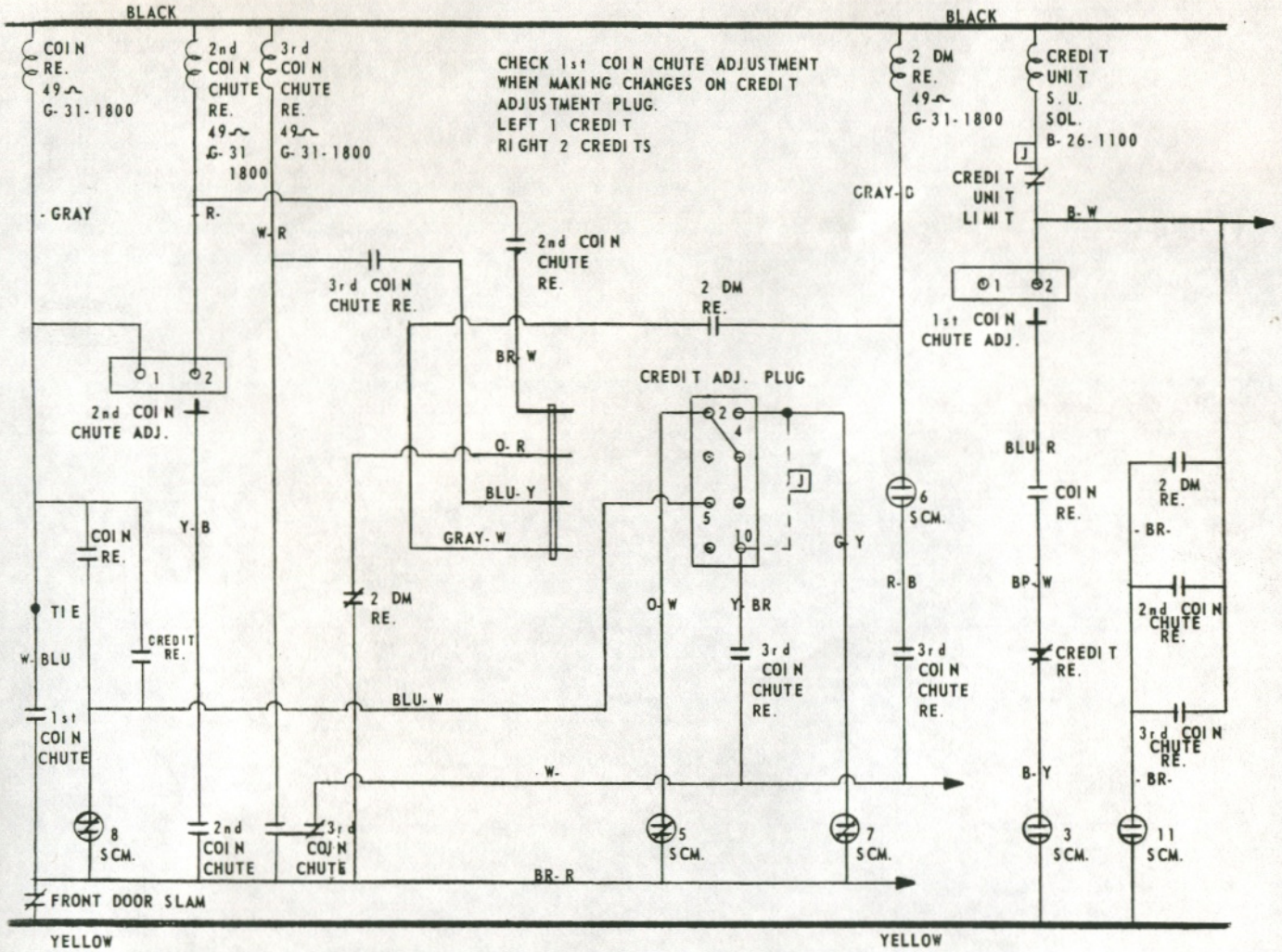

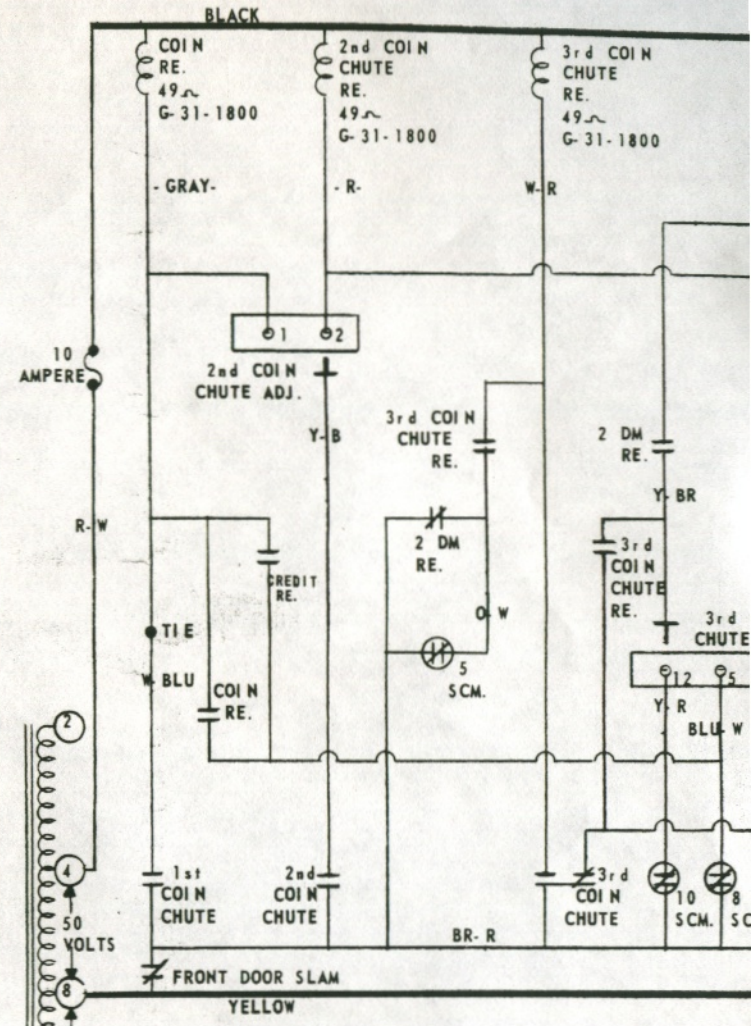

MANUFACTURING CORP.
2640 W. BELMONT AVE.
CHICAGO, ILL. 60618

COIN CHUTE CIRCUITS

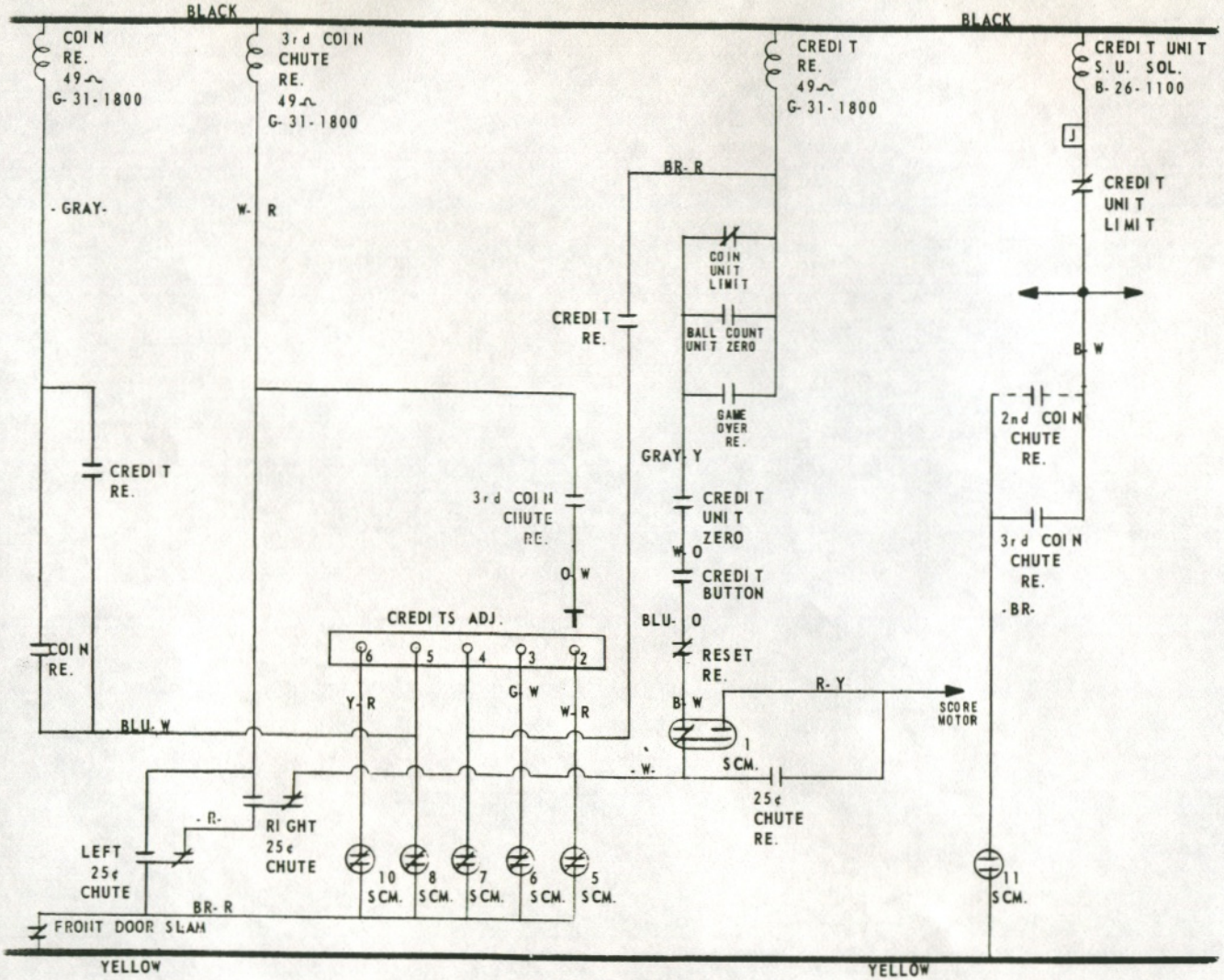
BLACK
COIN RE. 49Ω G-31-1800
3rd COIN CHUTE RE. 49Ω G-31-1800
CREDIT RE. 49Ω G-31-1800
CREDIT UNIT S.U. SOL. B-26-1100
BLACK
BR-R
CREDIT UNIT LIMIT
COIN UNIT LIMIT
BALL COUNT UNIT ZERO
GAME OVER RE.
CREDIT RE.
-GRAY-
W-R
CREDIT RE.
3rd COIN CHUTE RE.
O-W
GRAY-Y
CREDIT UNIT ZERO
W-O
CREDIT BUTTON
BLU-O
RESET RE.
B-W
R-Y
SCORE MOTOR
1 SCM.
25¢ CHUTE RE.
2nd COIN CHUTE RE.
3rd COIN CHUTE RE.
-BR-
CREDITS ADJ.
6 5 4 3 2
Y-R
G-W
W-R
COIN RE.
BLU-W
-R-
RIGHT 25¢ CHUTE
LEFT 25¢ CHUTE
10 SCM.
8 SCM.
7 SCM.
6 SCM.
5 SCM.
11 SCM.
BR-R
FRONT DOOR SLAM
YELLOW
YELLOW
EITHER CHUTE
(BOTH SAME DENOMINATION) 1 COIN 1 PLAY & 1 CREDIT

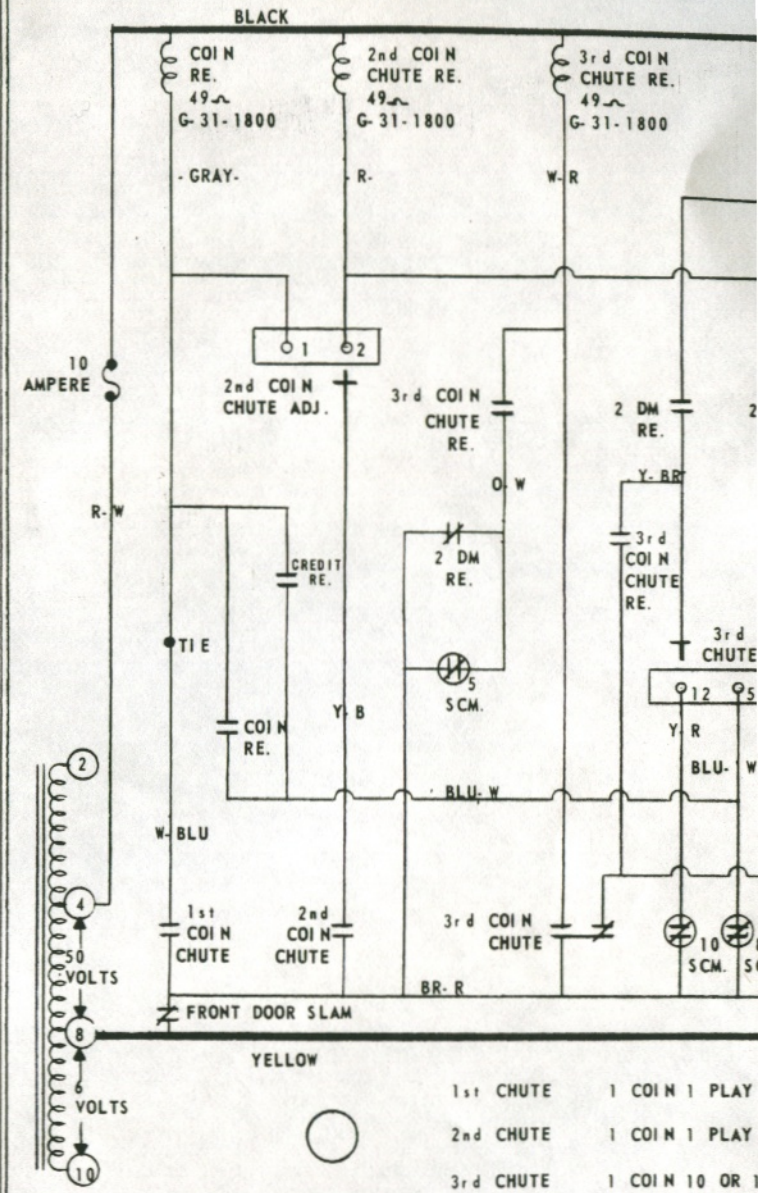
BLACK
COIN RE. 49Ω G-31-1800
2nd COIN CHUTE RE. 49Ω G-31-1800
3rd COIN CHUTE RE. 49Ω G-31-1800
-GRAY-
R-
W-R
1 2
2nd COIN CHUTE ADJ.
10 AMPERE
3rd COIN CHUTE RE.
2 DM RE.
O-W
Y-BR
R-W
CREDIT RE.
2 DM RE.
3rd COIN CHUTE RE.
TIE
5 SCM.
COIN RE.
Y-B
12
Y-R
BLU-W
BLU-W
W-BLU
1st COIN CHUTE
2nd COIN CHUTE
3rd COIN CHUTE
10 SCM.
50 VOLTS
BR-R
FRONT DOOR SLAM
6 VOLTS
YELLOW
1st CHUTE 1 COIN 1 PLAY
2nd CHUTE 1 COIN 1 PLAY
3rd CHUTE 1 COIN 10 OR

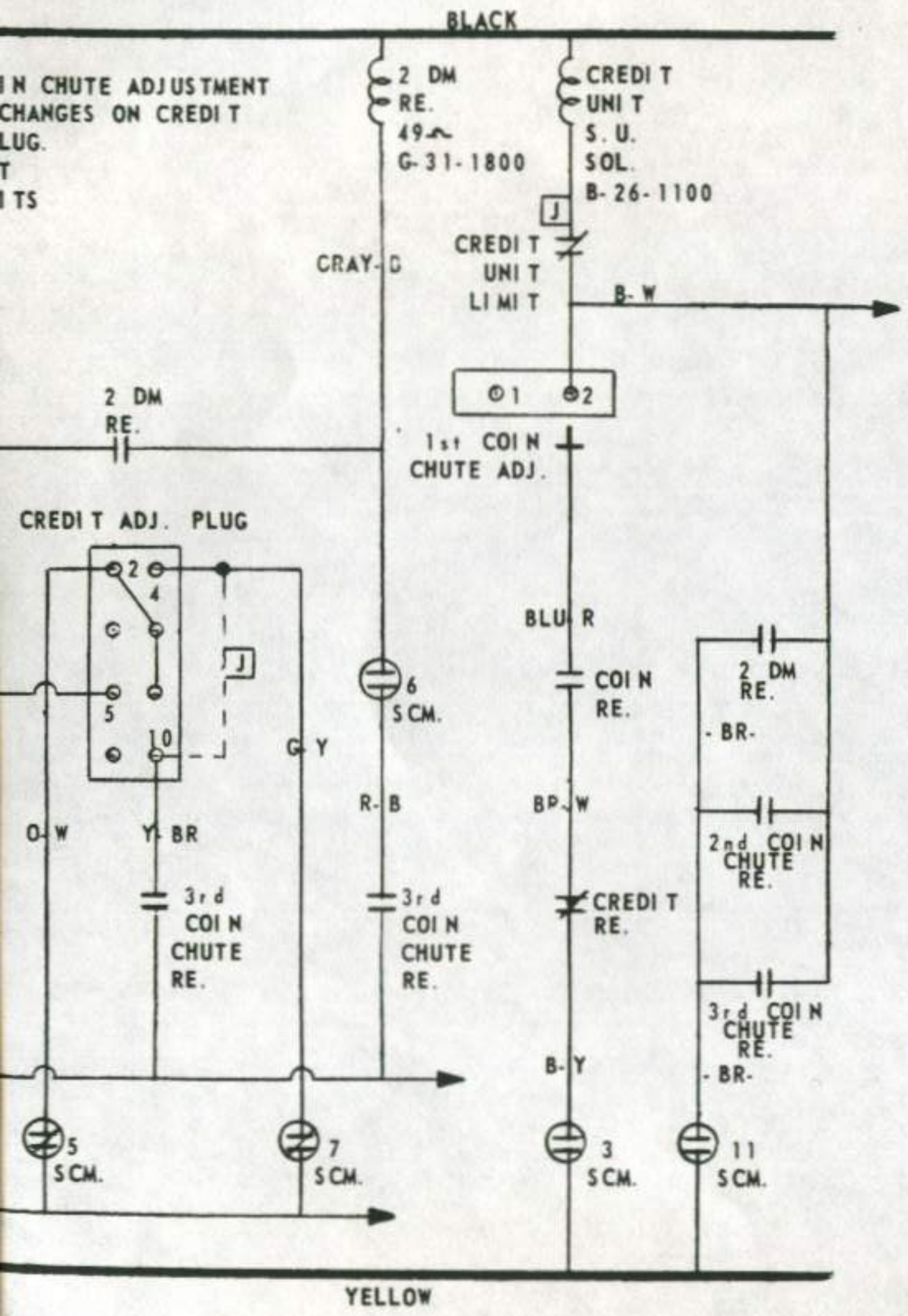

Y OR 1 PLAY & 1 CREDIT

CREDITS

0 CREDITS

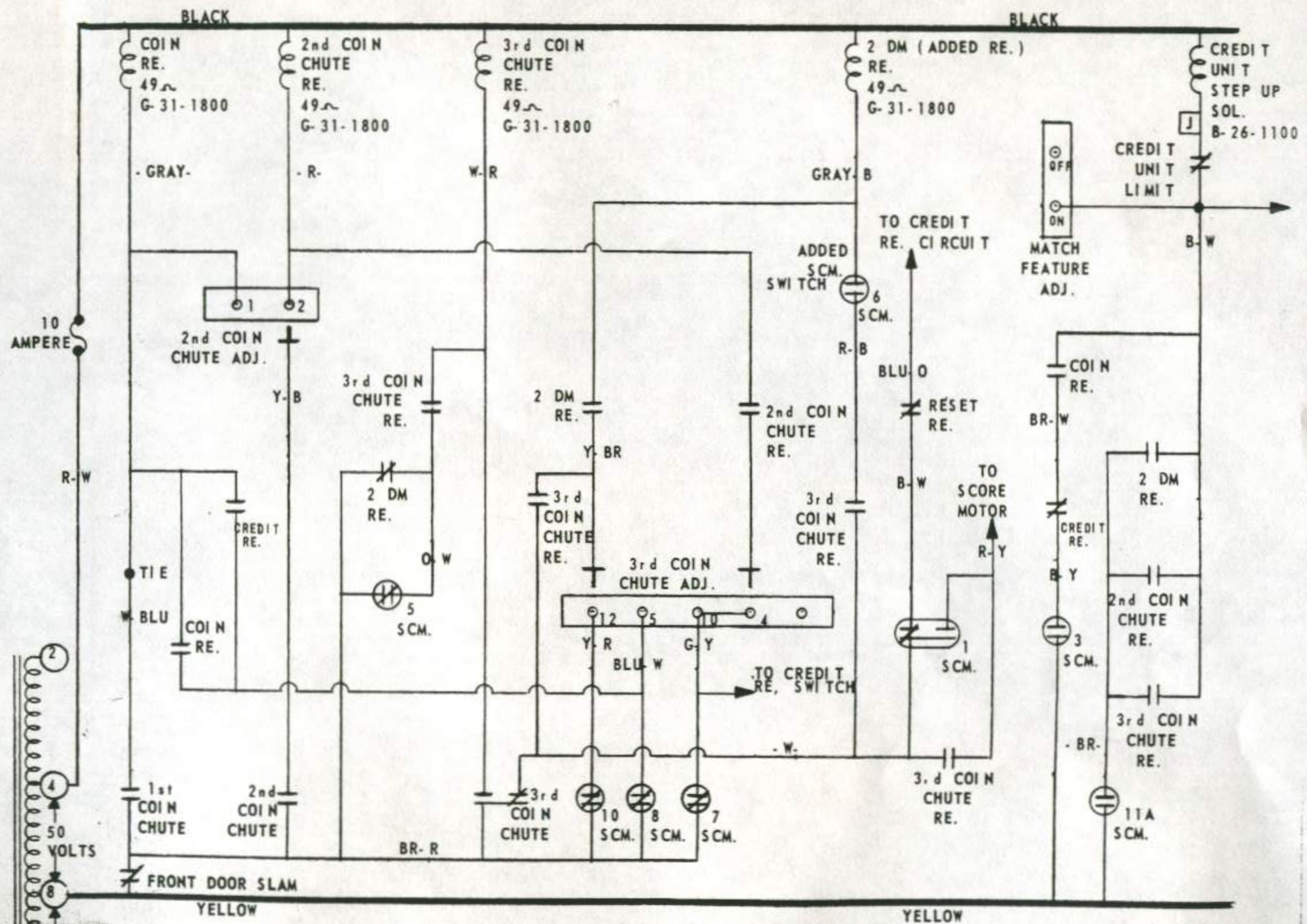

1st CHUTE	1 COIN 1 PLAY & 1 CREDIT
2nd CHUTE	1 COIN 2, 4 OR 5 CREDITS
3rd CHUTE	1 COIN 10 OR 12 CREDITS

IN CHUTE CIRCUITS

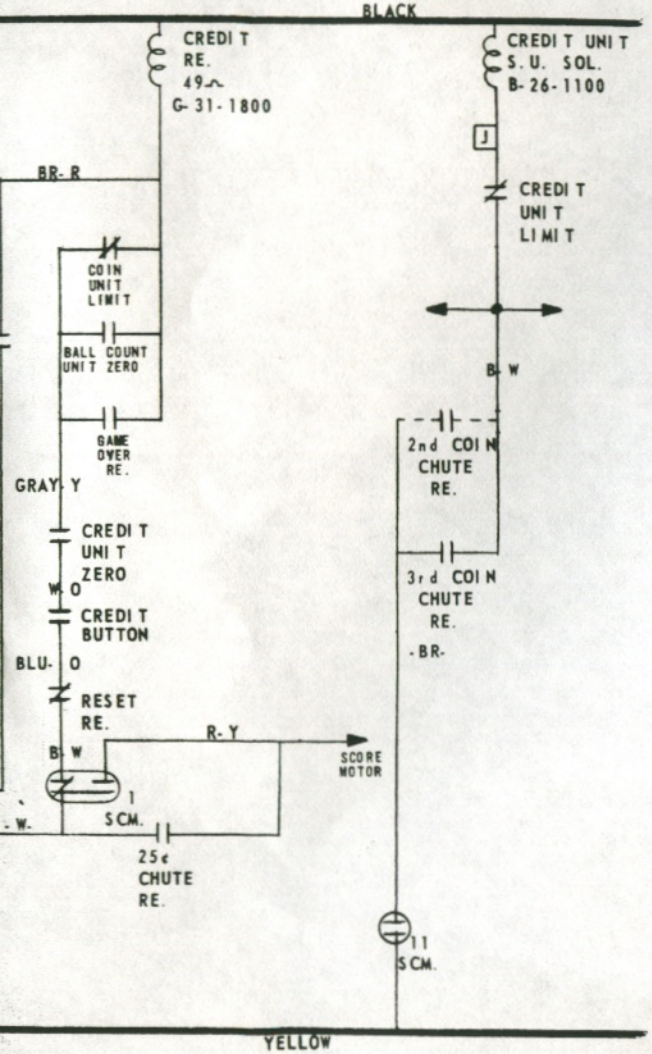

1 COIN 1 PLAY & 1 CREDIT

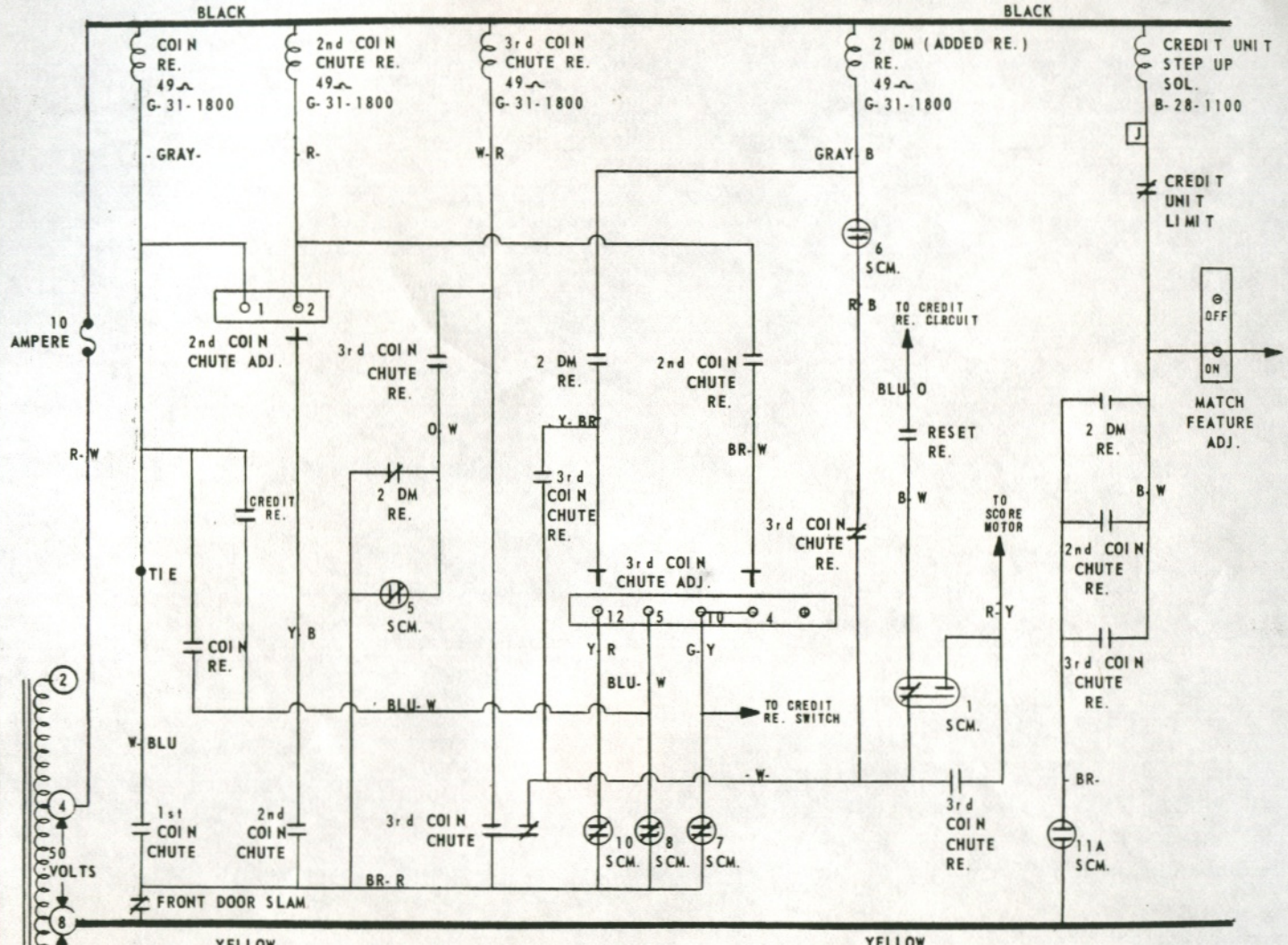

1st CHUTE	1 COIN 1 PLAY
2nd CHUTE	1 COIN 1 PLAY OR 1 COIN 4 OR 5 CREDITS
3rd CHUTE	1 COIN 10 OR 12 CREDITS